TBC 32000 XFL Vitroceramic hob with 2 zones in 30 cm

Autolock

Easy installation

DESCRIPTION	Vitroceramic hob with 2 zones in 30 cm
LIFE STYLE	Easy
COLOURS	
REFERENCE	REF. 112550008 EAN. 8434778014495

TBC 32000 XFL

FEATURES

Urban Colors Edition
Modular vitroceramic hob
2 cooking zones
1 high lights Ø 180 mm
1 high lights Ø 145 mm
Ceramic glass surface
Auto-lock safety system
Residual heat indicator
Easy installation kit
Maximum nominal power 3000 W

TBC 32000 XFL

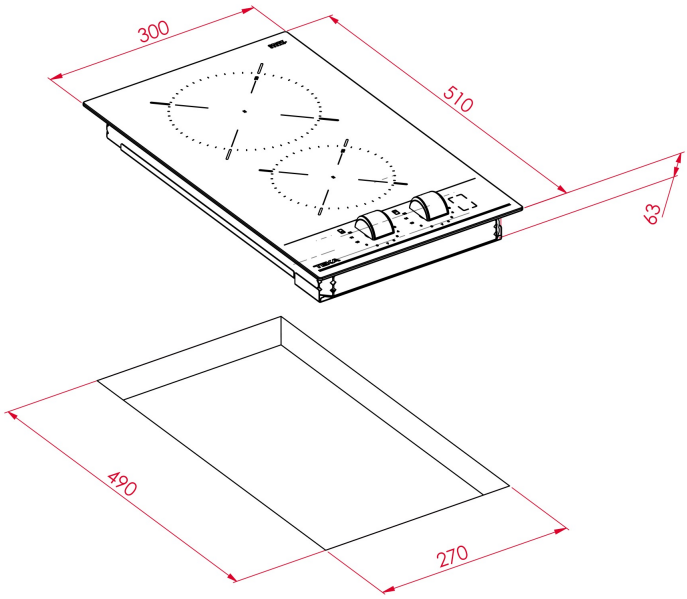

DIMENSIONS

Product height (mm): 63
Product width (mm): 300
Product depth (mm): 510
Product length (mm):
Net weight (Kg): 4,26

TECHNICAL DETAILS

FITTING MEASURES	**Built-in Width (mm):** 270 **Built-in Depth (mm):** 490 **Built-in height (mm):** 59
FEATURES	**Number of electric power levels:** 12
ELECTRIC CONNECTION	**Frequency (Hz):** 50/60 **Power rate (V):** 220-240 **Cable Connection Length (cm):** 110 **Maximum Nominal Power (W) (Electric hob):** 3000
COOKING ZONES	**Cooking Zones:** 2 **Energy consumption for the whole hob, Wh/Kg:** No
SAFETY SYSTEMS	**Residual heat indicator (Electric hob):** Yes **Automatic safety disconnection (Auto Lock) (Electric hob):** Yes

FINISH	**Surface finishing:** C-edged glass **Surface type:** Ceramic Glass (4mm) **Easy installation system:** Yes
ACCESSORIES	**Junction Kit:** NO **Teppan Yaki:** Optional