DirectSense IZF 68700 MST 60cm DirectSense with FullFlex Induction with temperature sensors

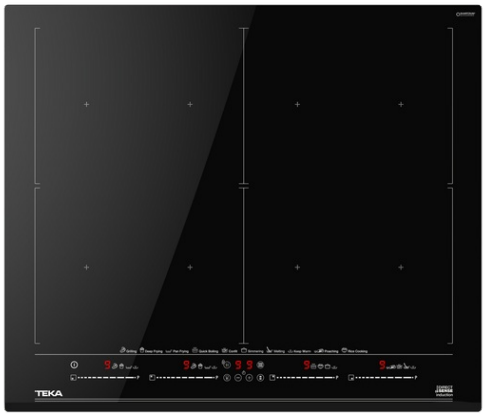

MultiSlider | Autolock | Power | Power Plus | Easy installation

DESCRIPTION	60cm DirectSense with FullFlex Induction with temperature sensors
LIFE STYLE	Maestro
COLOURS	
REFERENCE	REF. 112500037 EAN. 8434778016208

DirectSense IZF 68700 MST

FEATURES

Urban Colors Edition
MasterSense Series
FullFlex Induction hob
Direct functions with temperature sensors: Rice cooking, confit, poaching, grilling, pan frying, deep frying, quick boiling,keep warn, simmering and melting.
Touch Control MultiSlider
4 cooking zones
4 zones Ø 262,5 X 195 mm
Ceramic glass surface
Auto-lock safety system
Cooking timer
Power plus
Child lock
Residual heat indicator
Power management
Easy installation kit
Maximum nominal power 7400 W
Optional: Grilling plate
Optional: Teppanyaki

DirectSense IZF 68700 MST

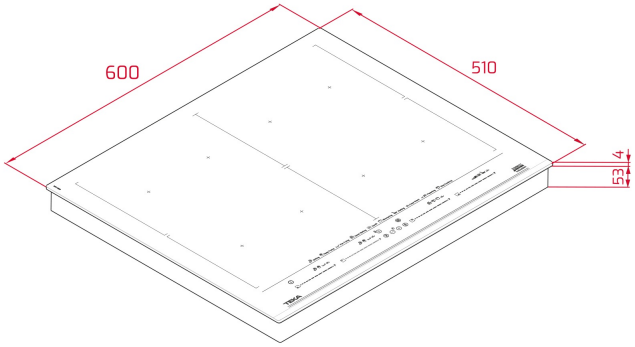

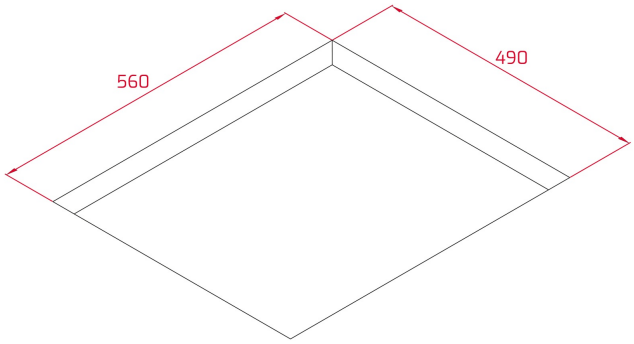

DIMENSIONS

Product height (mm): 57
Product width (mm): 600
Product depth (mm): 510
Product length (mm):
Net weight (Kg): 13,21

TECHNICAL DETAILS

FITTING MEASURES

Built-in Width (mm): 560
Built-in Depth (mm): 490
Built-in height (mm): 53

FEATURES

Number of electric power levels: 9
Grilling: Yes
Pan frying: Yes
Deep frying: Yes
Simmering: Yes
Melting: Yes
Keeping warm: Yes
Confit: Yes
Poach: Yes
Rice Cook: Yes
Low-temp Function: Yes
Power management function: Yes

ELECTRIC CONNECTION

Frequency (Hz): 50/60
Power rate (V): 220-240

Cable Connection Length (cm): 110
Maximum Nominal Power (W) (Electric hob): 7400

COOKING ZONES

Cooking Zones: 4

SAFETY SYSTEMS

Residual heat indicator (Electric hob): Yes
Automatic safety disconnection (Auto Lock) (Electric hob): Yes
Child lock: Yes

FINISH

Surface finishing: Front bevelled glass
Surface type: Ceramic Glass (4mm)
Easy installation system: Yes

ACCESSORIES

Junction Kit: Optional
Teppan Yaki: Optional