AirFry HSB 646 SS Multifunction SurroundTemp oven with special AirFry function

70L | Plus Extension Telescopic Guide | HydroClean | SurroundTemp

DESCRIPTION	Multifunction SurroundTemp oven with special AirFry function
LIFE STYLE	Total
COLOURS	
REFERENCE	REF. 111010024 EAN. 8434778017410

AirFry HSB 646 SS

FEATURES

AirFry oven
Multifunction SurroundTemp oven
9 cooking funtions
Special FryMaster Box to cook without oil
Automatic HydroClean system
Touch control display with knobs
Electronic timer(Delay/Start function)
Chrome supports with 5 cooking levels
Plus Extension Telescopic guides
Removable double glazed door
Children safety lock
Manual quick preheating
Anti-tip deep and baking trays
Capacity (gross/net): 71 / 70 litres

AirFry HSB 646 SS

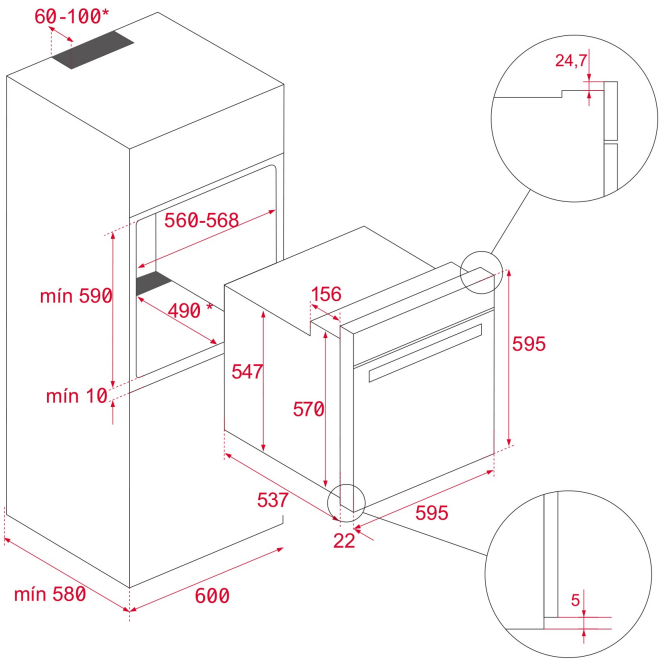

DIMENSIONS

Product height (mm): 595
Product width (mm): 595
Product depth (mm): 537+22
Product length (mm):
Net weight (Kg): 28

TECHNICAL DETAILS

FEATURES

Number of cavities: 1
Type of inner light: Halogen
Inside light position: RIGHT TOP CORNER
Enamelled cavity: Yes
Min. Temperature Regulator (ºC): 50
Max. Temperature Regulator (ºC): 250
Function selector: 11+0
Number of cooking functions: 9
Top + Bottom function: Yes
Grill function: Yes
MaxiGrill function: Yes
MaxiGrill + Fan function: Yes
Bottom function: Yes
Bottom + TURBO (Pizza) function: Yes
Turbo function: Yes
ECO function: Yes
Mechanical quick heating: Yes
Touch Control Programmer: Yes
Knobs type: MMX FIX knurling
Removable chromed tray guides: Yes
Number of guide levels: 5
Easy slide telescopic guides: Yes

ELECTRIC CONNECTION	**Maximum Nominal Power (W):** 3215 **Frequency (Hz):** 50/60 **Power rate (V):** 220-240 **Cable Connection Length (cm):** 150 **Plug:** Yes **Inside light Consumption (W):** 25
ENERGY CONSUMPTION	**Energy consumption per cycle in conventional mode (kWh):** 0.81 **Energy consumption per cycle in fan-forced convection mode (kWh):** 0,68 **Bottom Heating Element (W):** 1150 **Grill (W):** 1400 **Maxi Grill (W):** 2500 **Traditional (W):** 2550 **Turbo (W):** 2000 **Multifunction Turbo (W):** 22 **Cooling Fan Motor (W):** 18
SAFETY SYSTEMS	**Panel blocking system:** Yes **Grill protection:** Yes **Anti-tip tray system:** Yes **Safety Thermostat:** Yes
CLEANING SYSTEM	**Fingerprint proof stainless steel:** Yes **Crystal Clean Enamel (Slippery):** Yes **Hydroclean PRO:** Yes
ACCESSORIES	**Baking Tray:** 1 **Deep Tray (50 mm):** 1 **Standard grid:** 1
ENERGY EFFICIENCY	**Energy Efficiency Class:** A+ **Energy Efficiency Index (EEI):** 81

AirFry HSB 646 SS
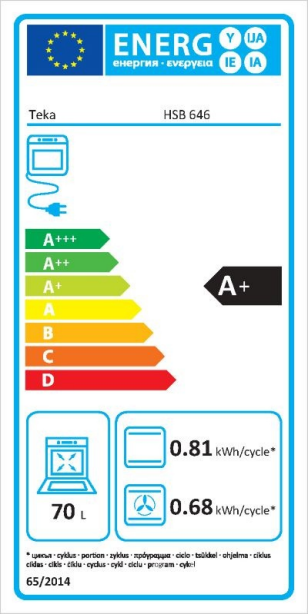
ENERGY LABEL