MaestroPizza HLB 85-G1 P BM Infinity G1 MaestroPizza oven.
Special edition by Italdesign Giugiaro

70L | DualClean | HydroClean | SoftClose

DESCRIPTION	Infinity G1 MaestroPizza oven. Special edition by Italdesign Giugiaro
LIFE STYLE	Maestro
COLOURS	
REFERENCE	REF. 111000056 EAN. 8434778022353

MaestroPizza HLB 85-G1 P BM

FEATURES

Infinity G1 special edition
Designed in Italy by Italdesign Giugiaro
Multifunction SurroundTemp oven
Exclusive matte black finishing
8 cooking functions
Pyrolysis self-cleaning system and automatic HydroClean system
Touch control display with knobs
Electronic timer (Delay/Start function)
Chrome supports with 5 cooking levels
Removable quadruple glazed door
Automatic disconnection security system
SoftClose system
Children safety lock
Manual quick preheating
Anti-tip deep tray, baking tray and reinforced grid
Special pizza stone included
Capacity (gross/net): 71 /70 litres

MaestroPizza HLB 85-G1 P BM

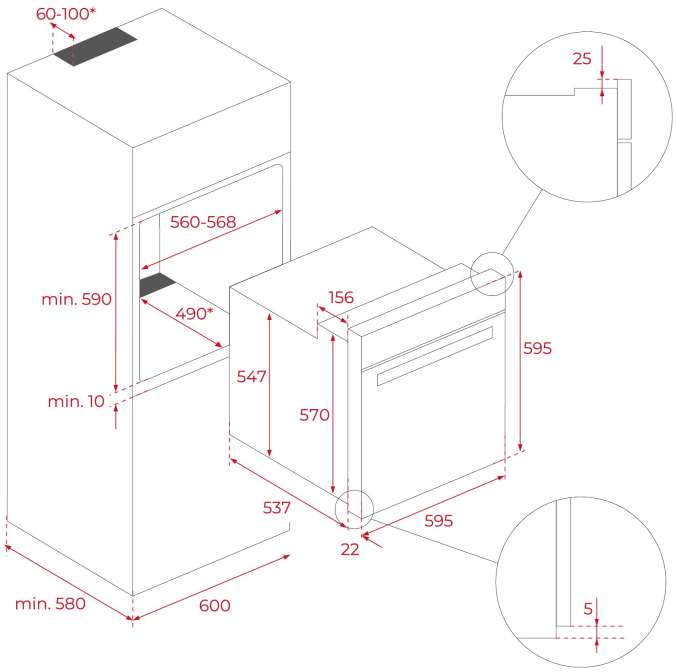

DIMENSIONS

Product height (mm): 595
Product width (mm): 595
Product depth (mm): 537+22
Product length (mm):
Net weight (Kg): 42

TECHNICAL DETAILS

FEATURES

Certificates: N / CE / CCA / CB / EAC
Number of cavities: 1
Type of inner light: Halogen
Inside light position: RIGHT TOP CORNER
Enamelled cavity: Yes
Min. Temperature Regulator (ºC): 50
Max. Temperature Regulator (ºC): 250
Function selector: 11+0
Number of cooking functions: 8
Top + Bottom function: Yes
Grill function: Yes
MaxiGrill function: Yes
ECO function: Yes
Mechanical quick heating: Yes
Knobs type: MMX FIX MATT
Removable chromed tray guides: Yes
Number of guide levels: 5
Easy slide telescopic guides: Yes
SoftClose: Yes

ELECTRIC CONNECTION

Maximum Nominal Power (W): 3552
Frequency (Hz): 50/60
Power rate (V): 220/240
Cable Connection Length (cm): 150
Plug: Yes
Inside light Consumption (W): 25

ENERGY CONSUMPTION

Energy consumption per cycle in conventional mode (kWh): 0.88
Energy consumption per cycle in fan-forced convection mode (kWh): 0,68
Bottom Heating Element (W): 1050
Grill (W): 1400
Maxi Grill (W): 2450
Traditional (W): 2450
Multifunction Turbo (W): 25
Cooling Fan Motor (W): 30

SAFETY SYSTEMS

Automatic disconnection when opening the door: Yes
Panel blocking system: Yes
Children safety block option: Yes
Grill protection: Yes
Anti-tip tray system: Yes
Safety Thermostat: Yes

CLEANING SYSTEM

Crystal Clean Enamel (Slippery): Yes
Hydroclean PRO: Yes
DualClean: Yes

ACCESSORIES

Baking Tray: 1
Deep Tray (50 mm): 1
Reinforced grid: 1
Baking Tray (lower cavity): 1
Deep Tray (lower cavity) (50 mm): 1

ENERGY EFFICIENCY

Energy Efficiency Class: A+
Energy Efficiency Index (EEI): 81

MaestroPizza HLB 85-G1 P BM
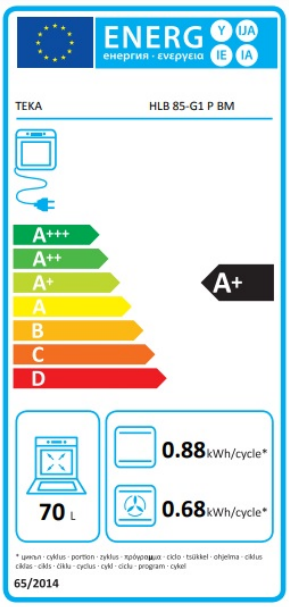
ENERGY LABEL