MAESTRO **MC 10 Plus (502)**

Monomando alto cromo

Anti-scale aerator

Swivel spout

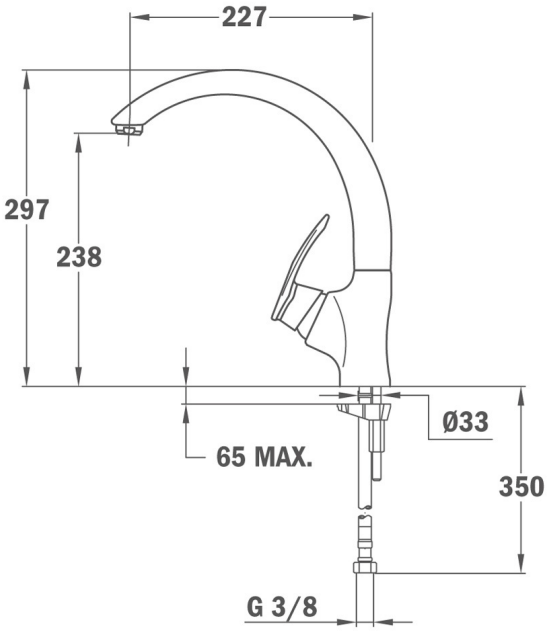

REFERENCE

REF: 97911502 EAN: 8413509176015

FEATURES

Acabado: Cromo
Sistema anticalcáreo
Medidas: 200 x 200 mm

DIMENSIONS

Product height (mm): 297
Product width (mm):
Product depth (mm):
Product length (mm):
Net weight (Kg): 2,55

COLOURS

97911502 Chrome