IBS 64900 TCS
60cm Induction Hob with 4 cooking zones and Touch Control

REFERENCE

REF: 112520001 EAN: 8434778000788

FEATURES

Induction hob with 4 zones in 60cm
Touch control
Stop&Go function
Timer 99 min
Residual heat indicators
Power level for each cooking zone
4 cooking zones: 2 induction cooking zone ø 160 mm, 1,500W & 2 induction cooking zone ø 200 mm, 2,000W
Total nominal power: 7,000 W

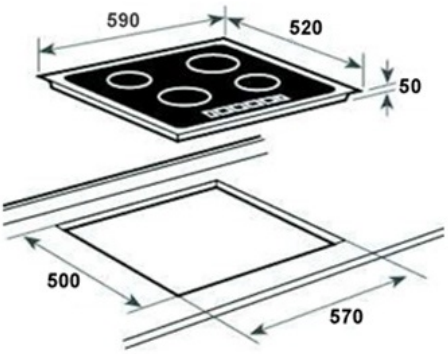

DIMENSIONS

Product height (mm):
Product width (mm):
Product depth (mm):
Product length (mm):
Net weight (Kg): 10,66

TECHNICAL DETAILS

Power rate (V): -
Frequency (Hz): -
Maximum Nominal Power (W): -

COLOURS

112520001 Black Glass

ENERGY EFFICIENCY

Power consumption in standby mode (W): -
Time to reach standby mode (min): -