HLB 840 Multifunction Surroundtemp Oven With HydroClean System In 60cm

70L capacity

Plus extension telescopic guide

HydroClean

SurroundTemp, extra rear resistance for a uniform cooking

DESCRIPTION	Multifunction Surroundtemp Oven With HydroClean System In 60cm
LIFE STYLE	Maestro
COLOURS	
REFERENCE	REF. 41560070 EAN. 8421152148587

HLB 840

FEATURES

Multifunction SurroundTemp – 9 Cooking functions
Teka HydroClean®PRO cleaning system
A+ Energy class: up to 20% less consumption
Capacity, gross/net: 71/70 litres
Touch Control with electronic timer
Quick heating
Children safety block
Automatic disconnection security system
Double glazed door
1 Plus-Extension telescopic guide, 5 cooking levels
Anti deep tray and reinforced grid
Dynamic ventilation

HLB 840

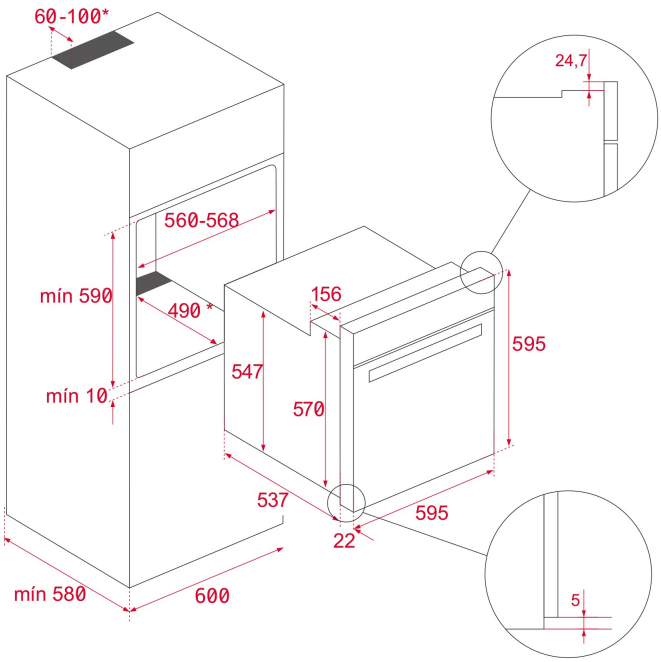

DIMENSIONS

Product height (mm): 595
Product width (mm): 595
Product depth (mm): 537+22
Product length (mm):
Net weight (Kg): 28

TECHNICAL DETAILS

FEATURES

Certificates: N / CE / CCA / CB/GMARK
Number of cavities: 1
Type of inner light: Halogen
Inside light position: RIGHT TOP CORNER
Enamelled cavity: Yes
Min. Temperature Regulator (ºC): 50
Max. Temperature Regulator (ºC): 250
Function selector: 11+0
Number of cooking functions: 9
Top + Bottom function: Yes
Grill function: Yes
MaxiGrill function: Yes
MaxiGrill + Fan function: Yes
Bottom function: Yes
Bottom + TURBO (Pizza) function: Yes
Turbo function: Yes
ECO function: Yes
Mechanical quick heating: Yes
Touch Control Programmer: Yes
Knobs type: MMX FIX knurling printed
Removable chromed tray guides: Yes
Number of guide levels: 5

Easy slide telescopic guides: Yes

ELECTRIC CONNECTION

Maximum Nominal Power (W): 3215
Frequency (Hz): 50/60
Power rate (V): 220-240
Cable Connection Length (cm): 110
Inside light Consumption (W): 25

ENERGY CONSUMPTION

Energy consumption per cycle in conventional mode (kWh): 0.81
Energy consumption per cycle in fan-forced convection mode (kWh): 0,68
Bottom Heating Element (W): 1150
Bottom Heating Element (W) (lower cavity): 1150
Grill (W): 1400
Maxi Grill (W): 2500
Traditional (W): 2550
Turbo (W): 2000
Multifunction Turbo (W): 22
Cooling Fan Motor (W): 18

SAFETY SYSTEMS

Panel blocking system: Yes
Grill protection: Yes
Anti-tip tray system: Yes
Safety Thermostat: Yes

CLEANING SYSTEM

Crystal Clean Enamel (Slippery): Yes
Hydroclean PRO: Yes

ACCESSORIES

Deep Tray (50 mm): 1
Reinforced grid: 1

ENERGY EFFICIENCY

Energy Efficiency Class: A+
Energy Efficiency Index (EEI): 81

HLB 840
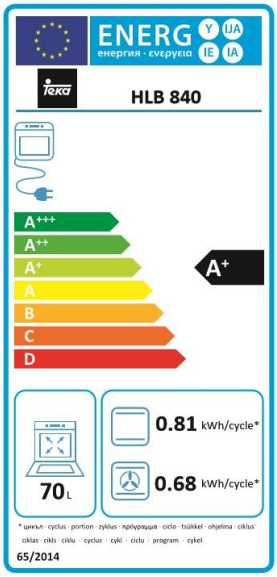
ENERGY LABEL