MB2 Mixer

DESCRIPTION	Mixer
LIFE STYLE	Easy
COLOURS	
REFERENCE	REF. 409113HD EAN. 8413509204572

MB2

FEATURES	Mixer Swivel spout 3/8" flexible inlet pipes Anti-scale aerator

MB2

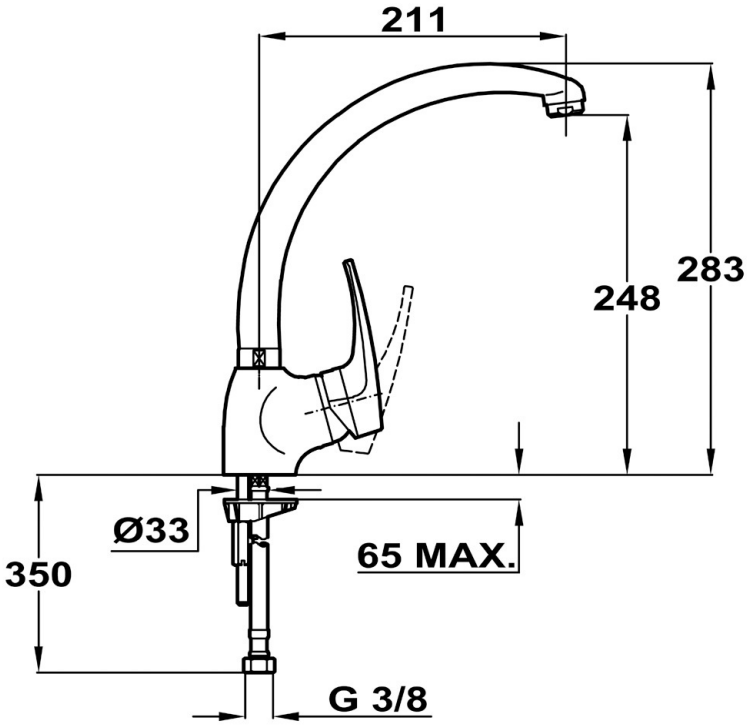

DIMENSIONS

Product height (mm):
Product width (mm):
Product depth (mm):
Product length (mm):
Net weight (Kg): 1,38