HCB 6435 Multifunction oven (Surround Temp) HydroClean PRO 9 cooking functions

HydroClean

DESCRIPTION	Multifunction oven (Surround Temp) HydroClean PRO 9 cooking functions
LIFE STYLE	Easy
COLOURS	
REFERENCE	REF. 111020013 EAN. 8434778003192

HCB 6435

FEATURES

Multifunction oven
8 Cooking functions
Automatic HydroClean system
Touch control display
Chrome supports with 5 cooking levels
Embossed cavity
Double glazed door
Children safety lock
Mechanical quick preheating
Anti-tip baking tray
Dynamic ventilation
Gross/net capacity: 70/65 litres

HCB 6435

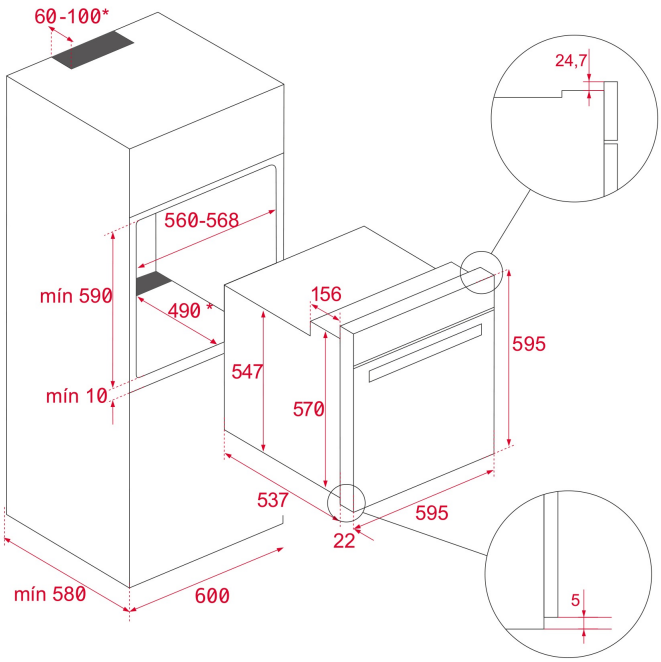

DIMENSIONS

Product height (mm): 595
Product width (mm): 595
Product depth (mm): 537+22
Product length (mm):
Net weight (Kg): 27

TECHNICAL DETAILS

FEATURES

Certificates: N / CE / CCA / CB
Number of cavities: 1
Type of inner light: Halogen
Inside light position: RIGHT TOP CORNER
Enamelled cavity: Yes
Min. Temperature Regulator (ºC): 50
Max. Temperature Regulator (ºC): 250
Function selector: 10+0
Number of cooking functions: 8
Top + Bottom function: Yes
Grill function: Yes
MaxiGrill function: Yes
Top + Bottom + Fan function: Yes
MaxiGrill + Fan function: Yes
Bottom function: Yes
ECO function: Yes
Mechanical quick heating: Yes
Touch Control Programmer: Yes
Knobs type: POP IN-OUT

ELECTRIC CONNECTION

Maximum Nominal Power (W): 2615
Frequency (Hz): 50/60
Power rate (V): 220-240
Cable Connection Length (cm): 110
Inside light Consumption (W): 25

ENERGY CONSUMPTION

Energy consumption per cycle in conventional mode (kWh): 0.86
Energy consumption per cycle in fan-forced convection mode (kWh): 0,68
Bottom Heating Element (W): 1150
Grill (W): 1400
Maxi Grill (W): 2500
Traditional (W): 2550
Multifunction Turbo (W): 22
Cooling Fan Motor (W): 18

SAFETY SYSTEMS

Panel blocking system: Yes
Grill protection: Yes
Anti-tip tray system: Yes
Safety Thermostat: Yes

CLEANING SYSTEM

Fingerprint proof stainless steel: Yes
Crystal Clean Enamel (Slippery): Yes
Hydroclean PRO: Yes

ACCESSORIES

Baking Tray: 1

ENERGY EFFICIENCY

Energy Efficiency Class: A+
Energy Efficiency Index (EEI): 81

HCB 6435
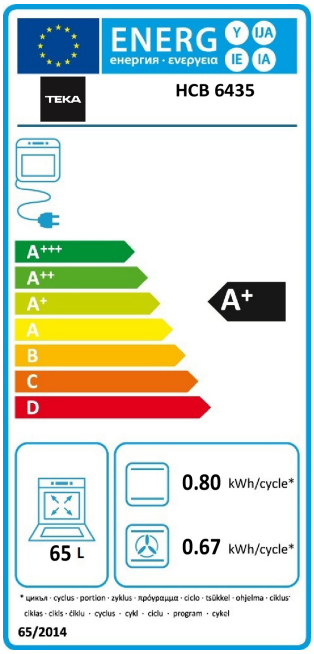
ENERGY LABEL