IBS 32920 TCS 30cm Induction Hob with 2 zones and Touch Control

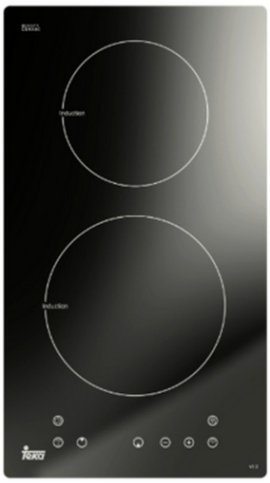

DESCRIPTION	30cm Induction Hob with 2 zones and Touch Control
LIFE STYLE	Easy
COLOURS	
REFERENCE	REF. 112520000 EAN. 8434778000610

IBS 32920 TCS

FEATURES

Induction hob with 2 zones in 30cm
Touch control
Stop-and-Go function
Timer 99 min
Residual heat indicators
Power level for each cooking zone
2 cooking zones: 1 induction cooking zone ø 160 mm, 1,500W & 1 induction cooking zone ø 200 mm, 2,000W
Total nominal power: 3,500 W

IBS 32920 TCS

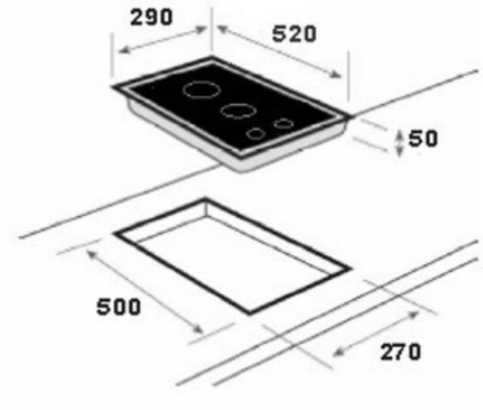

DIMENSIONS

Product height (mm):
Product width (mm):
Product depth (mm):
Product length (mm):
Net weight (Kg): 10,66