TLR2 92 90cm Recirculation Hood

DESCRIPTION	90cm Recirculation Hood
LIFE STYLE	Easy
COLOURS	
REFERENCE	REF. 113070001 EAN. 8434778001808

TLR2 92

FEATURES

Re-circulation pull-out hood
Mechanical control panel
2 speeds
Exhaust capacities: Free Outlet, m^3/h: 400
2 Incandescent lamps
3 aluminium filters
Automatic Lighting
Exhaust ventilation on front

TLR2 92

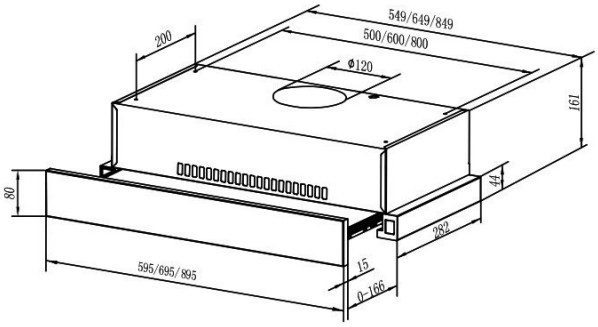

DIMENSIONS

Product height (mm): 161
Product width (mm): 895
Product depth (mm): 300
Product length (mm):
Net weight (Kg): 4,26

TECHNICAL DETAILS

MODELS	**Control panel:** Electronic soft bottons