RLF 74920 WT SS 90cm A++ Side by Side refrigerator

High efficiency Inveter Motor	On Holidays function	Fresh Box, keeps fruit and vegetables fresh for longer	Full No Frost	LED lighting

DESCRIPTION	90cm A++ Side by Side refrigerator
LIFE STYLE	Maestro
COLOURS	
REFERENCE	REF. 113430022 EAN. 8434778013283

RLF 74920 WT SS

FEATURES

Side by Side refrigerator
Full No Frost
Electronic control panel with freezer and refrigerator temperature control and indicator
Eco function
On holidays function
Fast Freeze / Quick Cool function
2 FreshBox drawers
7 safety glass shelves with adjustable height
LED ilumination
Safety lock for children
8 door balconies
External metal handle
Back wheels to move the appliance easily
Adjustable feet (front/rear)
Energy class: A++
Total gross capacity: 648 litres

RLF 74920 WT SS

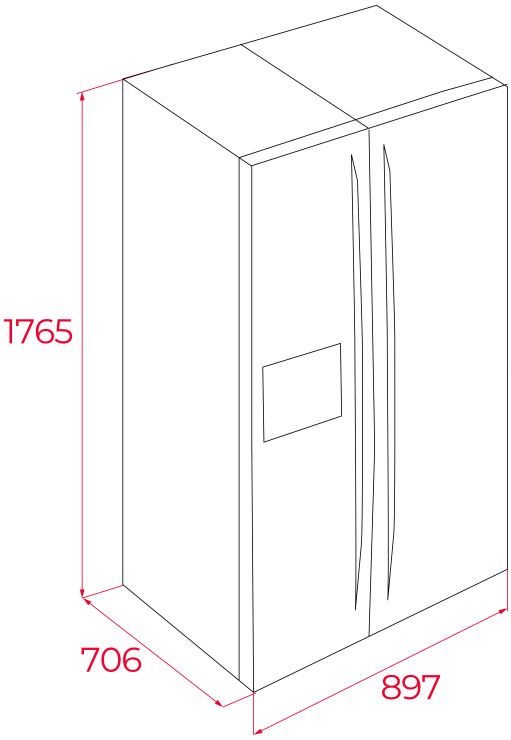

DIMENSIONS

Product height (mm): 1788
Product width (mm): 895
Product depth (mm): 745
Product length (mm):
Net weight (Kg): 108

TECHNICAL DETAILS

PRODUCT SHEET

Cooling system: FULL NF
No Frost In Refrigerator Compartment: Yes
No Frost in chiller: Yes
No Frost in freezer compartment: Yes
Total gross capacity (litres): 573
Refrigerator compartment capacity (litres): 334
Freezer compartment capacity (litres): 156
Freezer classification: 4
Freezing capacity: 14
Temperature Rise Time (h): 7
Climate class: N/T
Noise level (dB): 43
Certificates: CE, TUV, GS

POWER SUPPLY

Frequency (Hz): 50
Power rate (V): 220-240
Power rate (W): 188
Defrost element power (W): 240
Energy consumption (kw/day): 0,882
Plug type: EU F TYPE(CURRENT ONE/VDE)

Cable Connection Length (cm): 1750

FEATURES

Type of installation: Free standing
Automatic defrosting in the refrigeration compartment: Yes
Automatic defrosting in the freezer compartment: Yes
Control panel: LED DISPLAY
Electronic adjustable thermostat: Yes
Display on door: Yes
Fingerprint proof door: Yes
Antibacterial treatment: NO
Freezing set button: Yes
Cooling set button: Yes
Lock function: Yes
Fast freezing: Yes
Fast Cooling Function: Yes
On Holidays Function: Yes
Inner light: Yes
Type of inner light: LED
External handle: Yes

CONTROL INDICATOR LIGHTS

Operating light fridge: Yes
Operating light freezer: Yes
Freezer compartment temperature display: Yes
Fast freezing indicator: Yes
Acoustic alarm: Yes

EQUIPMENT

Chromed bottle rack: NO
Multipurpose compartment: NO
Automatic water dispenser: Yes
Automatic ice maker: Yes
Ice off: Yes
Ice cubes tray: NO
Bottle rack type: NO
Adjustable Feet Back: Yes
Adjustable feet front: Yes
Number of shelves: 4
Refrigerator adjustable shelves: Yes
Vegetable drawers: 2

RLF 74920 WT SS
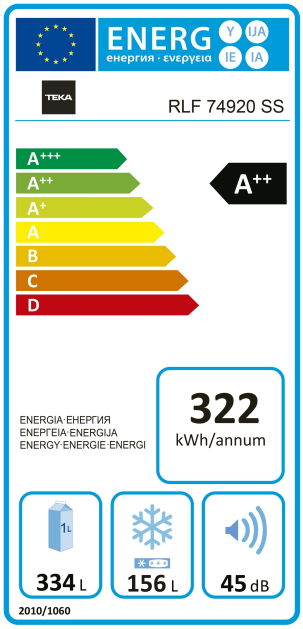
ENERGY LABEL