IZC 63630 MST

MasterSense Series induction hob with direct functions and MultiSlider touch control

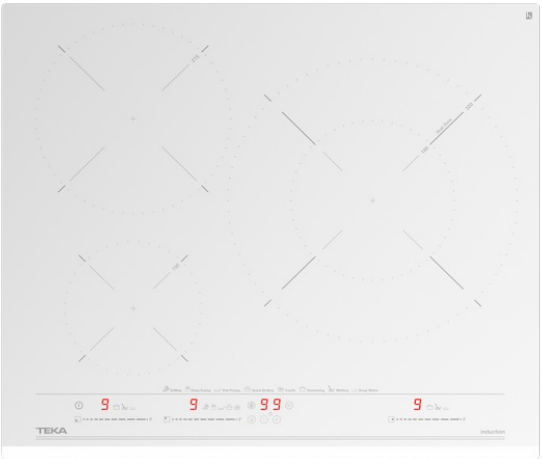

MultiSlider

Autolock

Power

Power Plus

Easy installation

Super Zone

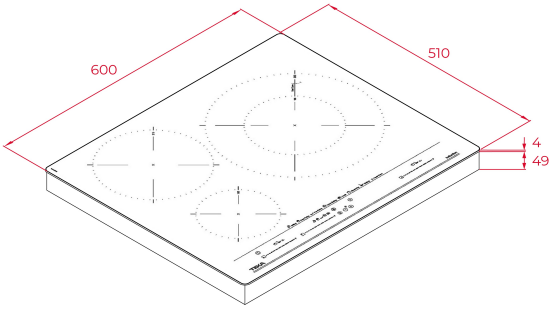

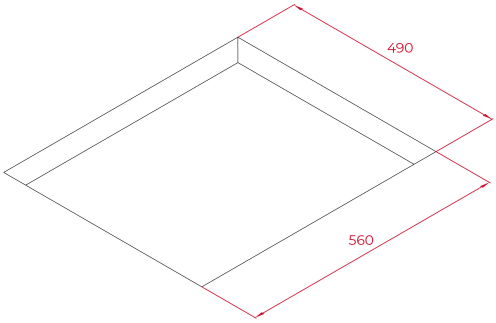

REFERENCE

REF: 112500018 EAN: 8434778011609

FEATURES

Urban Colors Edition
MasterSense Series
Induction hob
Direct functions with temperature sensors: Quick boiling, grilling, pan frying, deep frying, simmering, melting, confit and keep warm
Touch Control MultiSlider
3 cooking zones
1 zone Ø 320/180 mm
1 zone Ø 215 mm
1 zone Ø 150 mm
Ceramic glass surface
Auto-lock safety system
Cooking timer
Power plus
Child lock
Residual heat indicator
Power management
Easy installation kit
Maximum nominal power 7200 W
Optional: Grilling plate
Optional: Teppanyaki

DIMENSIONS

Product height (mm): 53
Product width (mm): 600
Product depth (mm): 510
Product length (mm):
Net weight (Kg): 10,7

TECHNICAL DETAILS

Power rate (V): 220-240
Frequency (Hz): 50/60
Maximum Nominal Power (W): -

COLOURS

112500018	White
112500017	Stone grey
112500017	Black glass

ENERGY EFFICIENCY

Power consumption in standby mode (W): 0.4
Time to reach standby mode (min): 1