DFI 76950
Fully integrated dishwasher with IonClean, MultiFlex 3 cutlery tray and Automatic Opening system

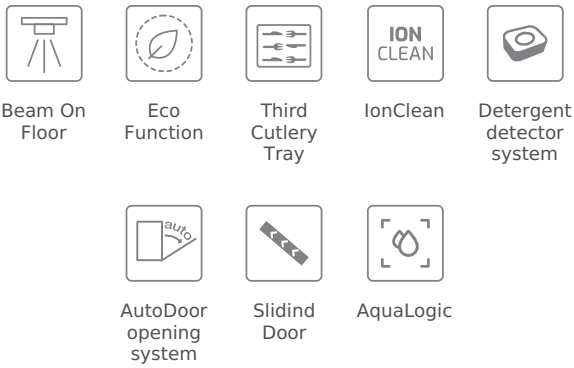

REFERENCE

REF: 114260004 EAN: 8434778013481

FEATURES

Built-in Dishwasher
Electronic control panel with display
Capacity: 15 plate settings
Washing programs: 9
Washing temperatures: 35°, 40°, 45°, 50°, 65°, 70°C
Motor Inverter
PremiumDry automatic opening system
MultiFlex 3 cutlerly tray
SmartSensor measure the level of dirtiness
MultiCleaner Sensor
FlexiSet 1 lower basket
Fast program: 30 minutes
Special programs: DualCare, GlassCare, AutoClean, AutoProgram, Intensive program, ECO program, 1-Hour, PreWash
Special functions: Half load, Express, PowerWash, IonClean
AquaStop and AquaSafe safety systems
Low salt and rinse indicator
Third sprayer
Push-up adjustable upper basket
Delay timer: 1-24 hours
Noise level: 42 dBA
Adjustable back feet from front
Sliding Detergent drawer
Column installation

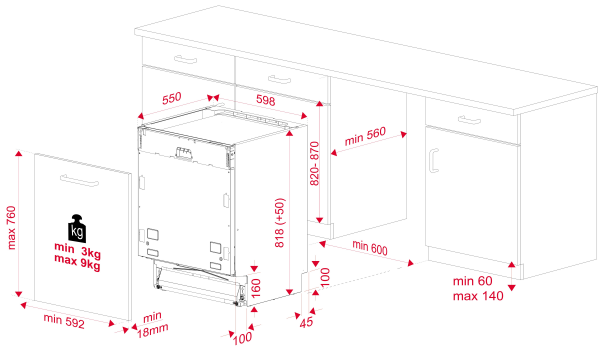

DIMENSIONS

Product height (mm): 818
Product width (mm): 598
Product depth (mm): 550
Product length (mm):
Net weight (Kg): 40,1

TECHNICAL DETAILS

Energy Efficiency Class: D
Energy Consumption (Kw/day): -
Water consumption (litres/year): 2660
Noise Level (dBA): 42
Power rate (V): 220-240
Frequency (Hz): 50

COLOURS