EASY **DVN 97050 TTC BK**

Vertical Decorative Hood with touch control and RIM Extraction 90 cm

LED

Stop Delay Timer

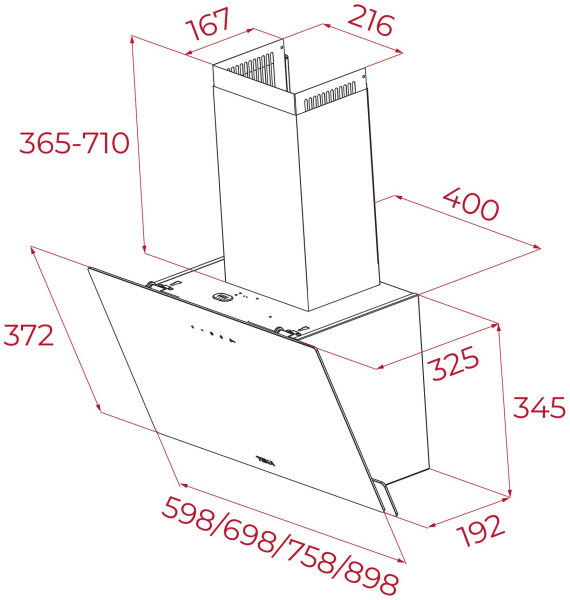

REFERENCE

REF: 112950012 EAN: 8434778011715

FEATURES

Urban Colors Edition
Decorative vertical hood
Touch control
Rim extraction
3 speeds + 1 intensive
Free Outlet exhaust capacity (m3/h): 704
Intensive speed exhaust capacity (m3/h): 640
Max speed exhaust capacity (m3/h): 485
Min speed exhaust capacity (m3/h): 260
Intensive speed sound level (dBA): 71
Max speed sound level (dBA): 64
Min speed sound level (dBA): 61
2 LED lamps
1 Aluminum Filter
Stop delay timer
Filer saturation indicator
Operating pilot light
Anti-return valve included
Outlet reduction included
Optional recirculation kit with tube cover installation: SET D13CTP
Optional Charcoal Filter: D9C

DIMENSIONS

Product height (mm): 690-1035
Product width (mm): 898
Product depth (mm): 325
Product length (mm):
Net weight (Kg): 12,1

TECHNICAL DETAILS

Energy Efficiency Class: A
Noise (LwA) Min Speed (dB): 54
Noise (LwA) Max Speed (dB): 64
Noise (LwA) Boost Speed (dB): 71
Ø Outlet (mm): 150

COLOURS

112950012 Black

112950015 White