TOTAL **MWR 22 BI**

22L Built-in Microwave with ceramic base

Ceramic base | Defrost By Time | Electronic Door Opening | 22L

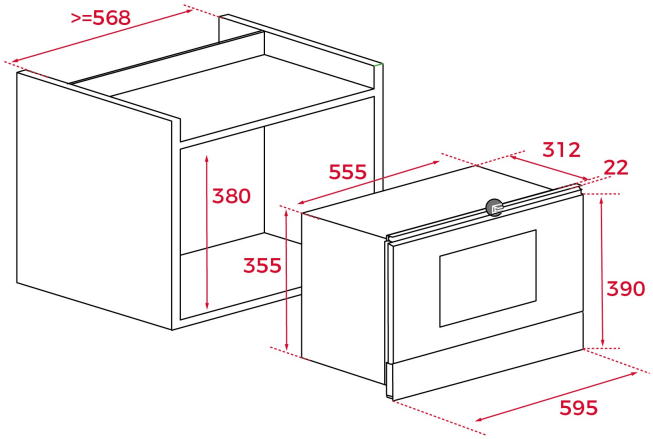

REFERENCE

REF: 40586302 EAN: 8421152141014

FEATURES

Country Style Edition
Built-in Microwave
Ceramic base with uniform heating
1 cooking function
5 power levels, 1400 W
Defrost by time
Mechanical control knobs
Double glazed door with left opening
Electronic door opening
Automatic disconnection when open door
Incandescent inner light
Capacity (gross/net): 22 / 21,56 litres
Stainless steel cavity
Tangential ventilation

DIMENSIONS

Product height (mm): 380/390
Product width (mm): 595
Product depth (mm): 334
Product length (mm):
Net weight (Kg): 21,6

TECHNICAL DETAILS

MWO Power (W): 850
Frequency (Hz): 50
Maximum Nominal Power (W): 1400
Grill (W): -

COLOURS