MAESTRO **ForSquare 34.40 TG**

Inset Tegranite sink with one bowl

200mm depth | Colour Intensity | Easy Clean | Food safe | High resistance

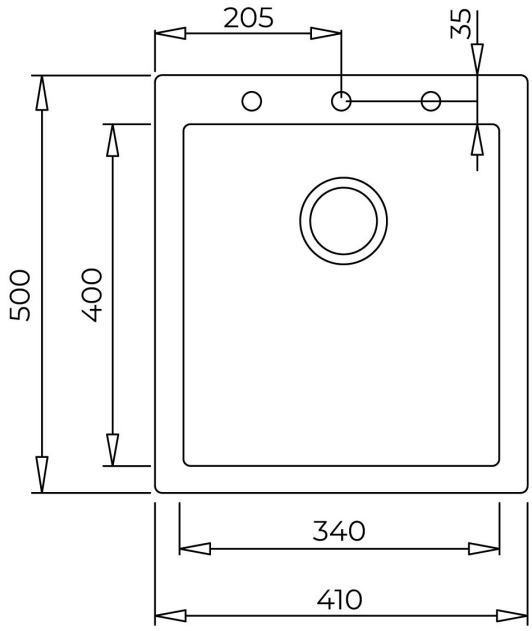

REFERENCE

REF: 115230012 EAN: 8434778007152

FEATURES

Tegranite+ sink
One bowl
Inset installation
3½" automatic basket waste with siphon
200 mm deep bowl
45 cm base unit

DIMENSIONS

Product height (mm):
Product width (mm): 500
Product depth (mm): 200
Product length (mm): 410
Net weight (Kg): 6,7

COLOURS

115230012	Avena Beige
115230010	Artic White
115230010	Bright Cream
115230010	Stone Grey
115230010	Black