Teka Home HLB 8700 P

Smart oven with WiFi connection, AirFry special function and 20 automatic recipes

70L

Plus extension guides: 75% extraction

HydroClean steam cleaning system

Pyrolysis cleaning system

SoftClose

SurroundTemp

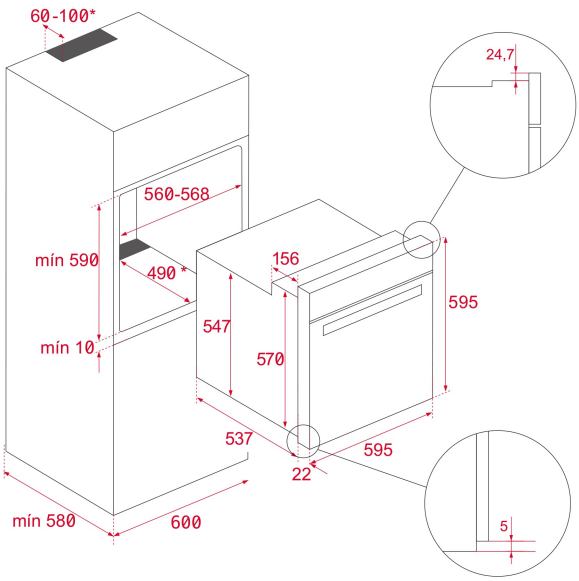

REFERENCE

REF: 111000047 EAN: 8434778017496

FEATURES

Teka Home: smart appliances with Wi-Fi connection
Multifunction SurroundTemp oven
12 cooking functions
Pyrolysis self-cleaning system and automatic HydroClean system
Touch control display with knobs
Personal cooking assistant: 20 automatic programs
Chrome supports with 5 cooking levels
Removable quadruple glazed door
Automatic disconnection security system
SoftClose system
Children safety lock
Automatic quick preheating
Anti-tip deep tray, baking tray and reinforced grid
Capacity (gross/net): 71 / 70 litres
FryMaster Box included

DIMENSIONS

Product height (mm): 595
Product width (mm): 595
Product depth (mm): 537+22
Product length (mm):
Net weight (Kg): 37

TECHNICAL DETAILS

Energy Efficiency Class: A+
Power rate (V): 220/240
Frequency (Hz): 50/60
Maximum Nominal Power (W): 3552

COLOURS

111000047 Black glass