INTEGRA GFI 97350 EOS IX

Fully integrated invisible hood, easy to install and with space for storage

LED

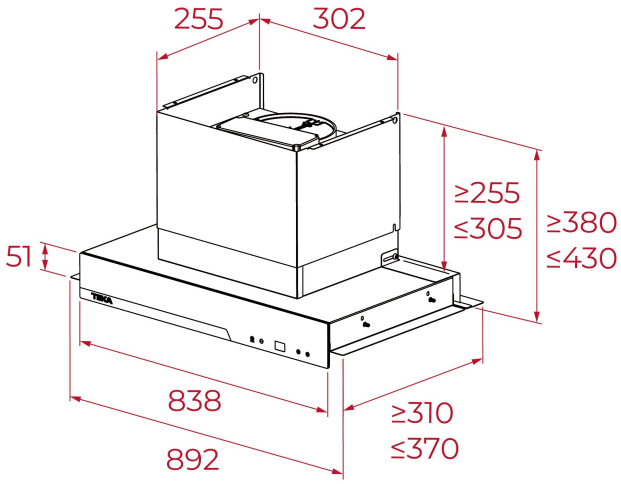

REFERENCE

REF: 113110003 EAN: 8434778033168

FEATURES

Built-in hood, 90cm
EasyFix installation with adjustable guides
Electronic touch control
3 speeds + 1 intensive
Fixed slim front panel
Compact body
LED lamp
EcoPower motor
Speed exhaust capacity (m3/h): 324-766
Speed sound level (dBA): 54-71
A+ Energy Class

DIMENSIONS

Product height (mm):
Product width (mm): 860
Product depth (mm):
Product length (mm):
Net weight (Kg):

TECHNICAL DETAILS

Energy Efficiency Class: A+
Noise (LwA) Min Speed (dB): 53,8
Noise (LwA) Max Speed (dB): 71
Noise (LwA) Boost Speed (dB): 73,3
Ø Outlet (mm): 150

COLOURS

113110003 Stainless steel

113110004 Black