HLF 824 G Multifunction Oven with 5 cooking functions

69L

DESCRIPTION	Multifunction Oven with 5 cooking functions
LIFE STYLE	Total
COLOURS	
REFERENCE	REF. 41596005 EAN. 8421152155202

HLF 824 G

FEATURES

Multifunction oven
Gas oven with gas grill
5 cooking functions
Mechanical control knobs
Mechanical timer
Chrome supports with 5 cooking levels
Removable triple glazed door
Manual quick preheating
Anti-tip deep tray and reinforced grid
Capacity (gross/net): 88 / 69 litres

HLF 824 G

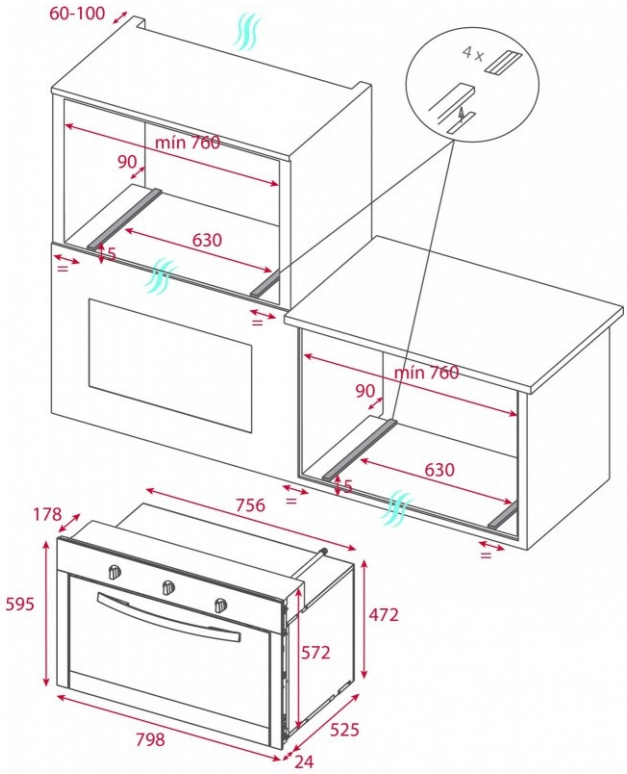

DIMENSIONS

Product height (mm): 595
Product width (mm): 798
Product depth (mm): 525
Product length (mm):
Net weight (Kg): 40

TECHNICAL DETAILS

FEATURES

Number of cavities: 1
Type of inner light: Halogen
Inside light position: SIDE
Enamelled cavity: Yes
Min. Temperature Regulator (ºC): 50
Max. Temperature Regulator (ºC): 250
Function selector: 5+0
Number of cooking functions: 5
Grill function: Yes
Grill + Fan function: Yes
Bottom function: Yes
Bottom + Fan function: Yes
Minute Minder: Yes
Knobs type: MMX FIX KNOB knurling ø47
Removable chromed tray guides: Yes
Number of guide levels: 5
Drop-down grill: Yes
Forced refrigeration tangential 1 speed: Yes

ELECTRIC CONNECTION

Maximum Nominal Power (W): 1.998

Frequency (Hz): 50/60
Power rate (V): 127
Cable Connection Length (cm): 110
Inside light Consumption (W): 25

ENERGY CONSUMPTION

Energy consumption per cycle in conventional mode (kWh): 2.36
Energy consumption per cycle in fan-forced convection mode (kWh): 2,54
Bottom Heating Element (W): 4.000
Bottom Heating Element (W) (lower cavity): 4000
Grill (W): 1.9
Multifunction Turbo (W): 30
Cooling Fan Motor (W): 18

SAFETY SYSTEMS

Grill protection: Yes
Anti-tip tray system: Yes
Safety Thermostat: Yes

CLEANING SYSTEM

Fingerprint proof stainless steel: Yes
Crystal Clean Enamel (Slippery): Yes

ACCESSORIES

Deep Tray (50 mm): 1
Reinforced grid: 1

ENERGY EFFICIENCY

Energy Efficiency Class: B
Energy Efficiency Index (EEI): 129,4