# **PERFECTA4 DLH 985 T** 90cm Decorative Hood with Touch Control Display and ECOPOWER A4 motor

LED | PERFECTA-4 | Stop Delay Timer

| | |
|---|---|
| **DESCRIPTION** | 90cm Decorative Hood with Touch Control Display and ECOPOWER A4 motor |
| **LIFE STYLE** | Maestro |
| **COLOURS** | |
| **REFERENCE** | REF. 40437100<br>EAN. 8421152145661 |

# PERFECTA4 DLH 985 T

**FEATURES**

Decorative horizontal hood
Electronic control with display
EcoPower motor
3 speeds + 1 intensive
Free Outlet exhaust capacity (m3/h): 795
Intensive speed exhaust capacity (m3/h):740
Max speed exhaust capacity (m3/h): 586
Min speed exhaust capacity (m3/h): 306
Intensive speed sound level (dBA): 60
Max speed sound level (dBA): 55
Min speed sound level (dBA): 54
1 LED lamp
3 Stainless Steel filters with 12 layers
Stop delay timer
Filter saturation indicator
Operating pilot light
Exchangeable front panel
Anti-return valve included
Outlet reduction included

# PERFECTA4 DLH 985 T

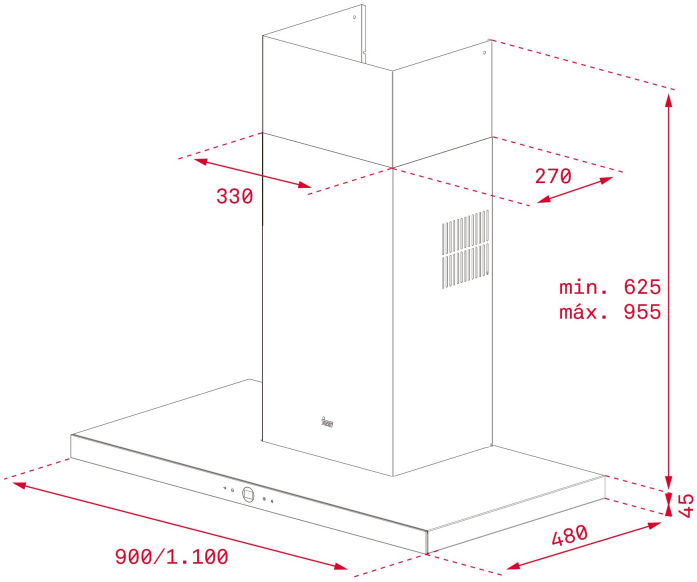


## DIMENSIONS

**Product height (mm):** 670-1000
**Product width (mm):** 900
**Product depth (mm):** 480
**Product length (mm):**
**Net weight (Kg):** 15,33

## TECHNICAL DETAILS

### FEATURES

**Certificates:** CE; CB; Rohs
**Ø Outlet (mm):** 150
**Type of inner light:** LED
**Inside light Consumption (W):** 1 7
**Plug type:** Schuko plug
**Power rate (V):** 230
**Frequency (Hz):** 50
**Total hood power (W):** 287
**Number of motors:** 1
**Motor power (W):** 280
**Air flow (Qmin) m3/h:** 352
**Air flow (Qmax):** 651
**Air flow (Qboost):** 760

### ACCESSORIES

**Anti Return valve:** Yes
**Outlet reduction:** Yes
**Outlet extension:** No
**Optional Charcoal Filter:** C1RTK
**Regenerative charcoal filter:** R1RTK
**Conventional recirculation kit (opt) - w/tube cover:** CFH 15200

L3C
**Regenerative recirculation kit (opt) - w/tube cover:** RFH 15200 L3C

**MODELS**

**Number of filters:** 3
**Filter description:** Stainless Steel filters MMX
**Control panel:** Touch Control (Glass Front) white display
**Stop delay timer:** Yes
**Filter saturation indicator:** Yes
**Time clock:** Yes
**Number of speeds:** 3+1

# PERFECTA4 DLH 985 T
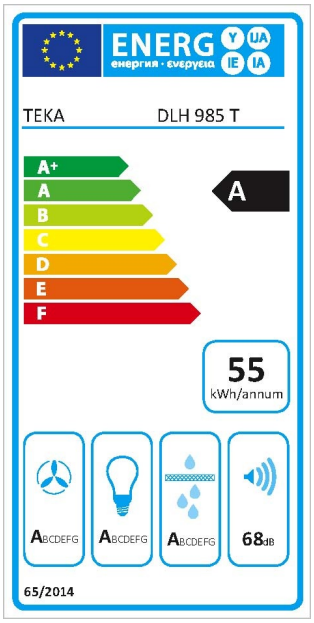
## ENERGY LABEL