DBB 70 SS 70cm Pyramidal Decorative Hood with push buttons controls

LED

DESCRIPTION	70cm Pyramidal Decorative Hood with push buttons controls
LIFE STYLE	Easy
COLOURS	
REFERENCE	REF. 40460420 EAN. 8421152069639

DBB 70 SS

FEATURES

Decorative pyramidal hood
Push buttons control
3 speeds
Free Outlet exhaust capacity (m3/h): 475
Max speed exhaust capacity (m3/h): 380
Min speed exhaust capacity (m3/h): 234
Max speed sound level (dBA): 54
Min speed sound level (dBA): 44
2 LED lamps
2 Aluminium filters
Operating pilot light
Anti-return valve included
Outlet reduction included
Optional recirculation kit with tube cover installation: SET 1/M1
Optional Charcoal Filter: D4C

DBB 70 SS

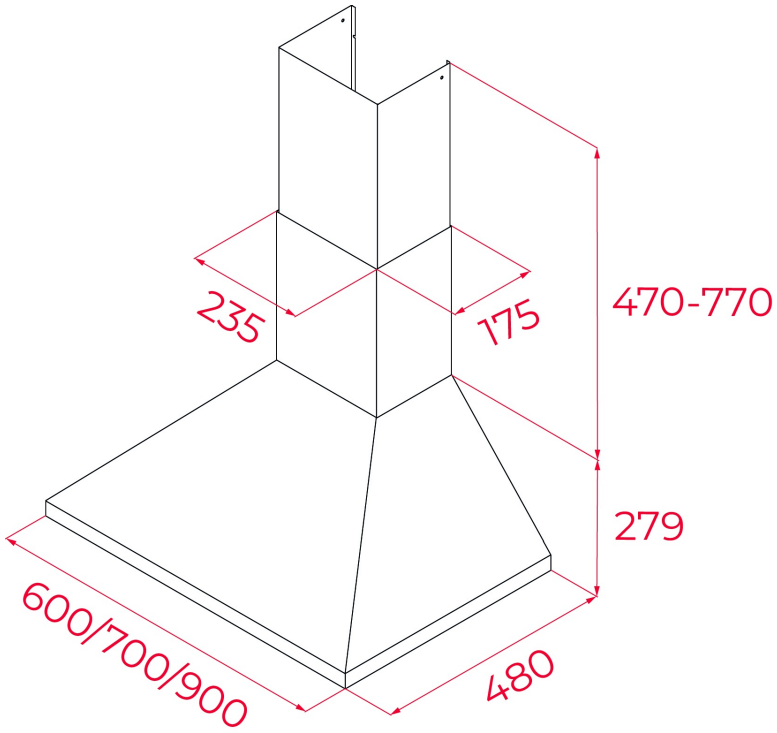

DIMENSIONS

Product height (mm): 749-1049
Product width (mm): 700
Product depth (mm): 480
Product length (mm):
Net weight (Kg): 8,1

TECHNICAL DETAILS

FEATURES

Certificates: CE; CB
Ø Outlet (mm): 150
Type of inner light: LED
Inside light Consumption (W): 5
Plug type: European plug
Power rate (V): 220-240
Frequency (Hz): 50/60
Total hood power (W): 115
Number of motors: 1
Motor power (W): 105
Air flow (Qmin) m3/h: 234
Air flow (Qmax): 380
Air flow (Qboost): 0

ACCESSORIES

Anti Return valve: Yes
Outlet reduction: Yes
Optional Charcoal Filter: C1RTK
Regenerative charcoal filter: R1RTK
Conventional recirculation kit (opt) - w/tube cover: CFH 15200 L2C
Regenerative recirculation kit (opt) - w/tube cover: RFH 15200

	L2C
MODELS	**Number of filters:** 2 **Filter description:** Aluminum **Control panel:** Rectangular Push Buttons **Number of speeds:** 3

DBB 70 SS
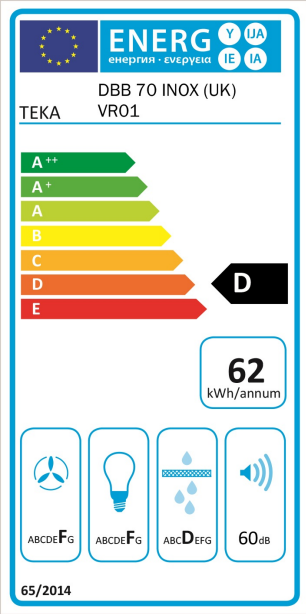
ENERGY LABEL