DH2 ISLA 1285 120cm A Decorative Island Hood with eletronic panel and ECOPOWER motor

LED

Stop Delay Timer

DESCRIPTION	120cm A Decorative Island Hood with eletronic panel and ECOPOWER motor
LIFE STYLE	Total
COLOURS	
REFERENCE	REF. 40484671 EAN. 8421152145746

DH2 ISLA 1285

FEATURES

Decorative horizontal island hood
Electronic control with display
3 speeds + 1 intensive
Free Outlet exhaust capacity (m3/h): 920
Intensive speed exhaust capacity (m3/h): 796
Max speed exhaust capacity (m3/h): 605
Min speed exhaust capacity (m3/h): 311
Intensive speed sound level (dBA): 71
Max speed sound level (dBA): 66
Min speed sound level (dBA): 52
4 LED lamps
2 Stainless Steel filters
Stop delay timer
Filter saturation indicator
Easy-Clean inside panel
Operating pilot light
Anti-return valve included
Outlet reduction included
Optional recirculation kit with tube cover installation: SET 1/T1
Optional Charcoal Filter: D4C

DH2 ISLA 1285

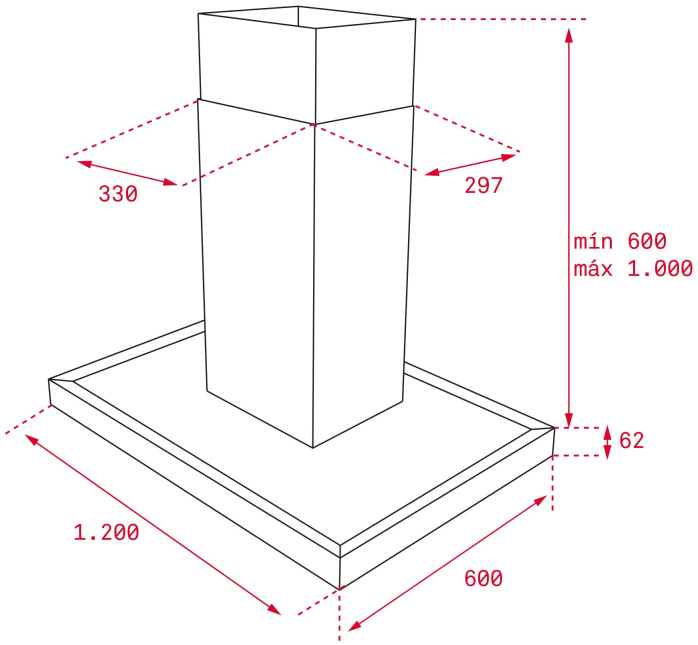

DIMENSIONS

Product height (mm): 817 / 1117 + 62
Product width (mm): 1200
Product depth (mm): 600
Product length (mm):
Net weight (Kg): 19,2

TECHNICAL DETAILS

FEATURES

Ø Outlet (mm): 150
Type of inner light: LED
Inside light Consumption (W): 3
Plug type: European plug
Power rate (V): 220-240
Frequency (Hz): 50
Total hood power (W): 292
Number of motors: 1
Motor power (W): 280
Air flow (Qmin) m3/h: 311
Air flow (Qmax): 605
Air flow (Qboost): 796

ACCESSORIES

Anti Return valve: Yes
Outlet reduction: Yes
Optional Charcoal Filter: D4C
Conventional recirculation kit (opt) - w/tube cover: SET 1/T1

MODELS

Number of filters: 4

Filter description: Stainless Steel filters
Control panel: Backlit electronic control with white display
Stop delay timer: Yes
Filter saturation indicator: Yes
Easy-clean inside panel: Yes
Number of speeds: 3+1

DH2 ISLA 1285
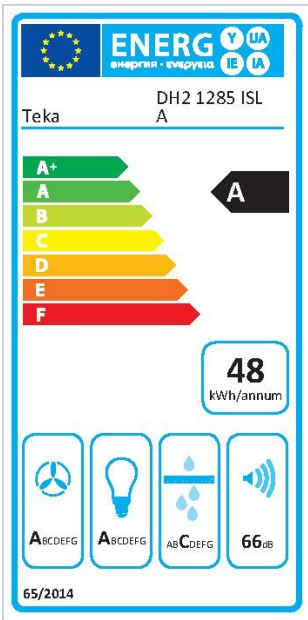
ENERGY LABEL