TRC 83631 80cm Vitroceramic Hob with 3 zones and Touch Control

Autolock | Power Plus | Easy installation

DESCRIPTION	80cm Vitroceramic Hob with 3 zones and Touch Control
LIFE STYLE	Maestro
COLOURS	
REFERENCE	REF. 112530000 EAN. 8434778008807

TRC 83631

FEATURES

Urban Colors Edition
Vitroceramic hob
Touch Control
3 cooking zones
1 high lights Ø 145/210/270 mm
1 high lights Ø 180 mm
1 high lights Ø 145 mm
Ceramic glass surface
Auto-lock safety system
Cooking timer
Power plus
Child lock
Residual heat indicator
Easy installation kit
Maximum nominal power 5700 W
Optional: Grilling plate
Optional: Teppanyaki

TRC 83631

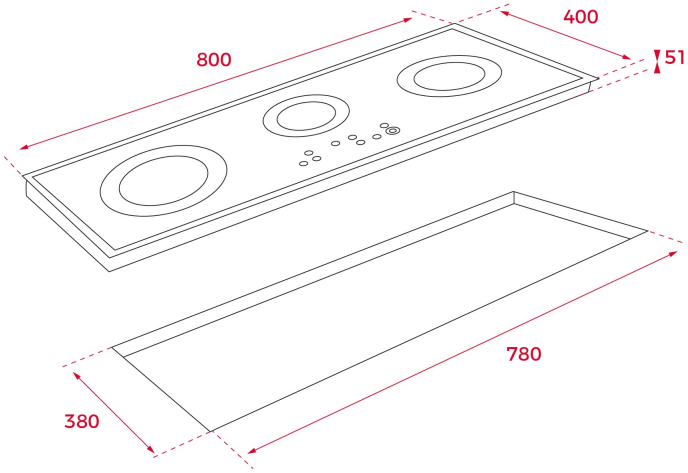

DIMENSIONS

Product height (mm): 51
Product width (mm): 800
Product depth (mm): 400
Product length (mm):
Net weight (Kg): 11

TECHNICAL DETAILS

FITTING MEASURES	**Built-in Width (mm):** 780 **Built-in Depth (mm):** 380 **Built-in height (mm):** 51
FEATURES	**Number of electric power levels:** 9
ELECTRIC CONNECTION	**Frequency (Hz):** 50/60 **Power rate (V):** 220-240 **Maximum Nominal Power (W) (Electric hob):** 5700
COOKING ZONES	**Cooking Zones:** 3
SAFETY SYSTEMS	**Residual heat indicator (Gas):** Yes **Residual heat indicator (Electric hob):** Yes **Automatic safety disconnection (Auto Lock) (Electric hob):** Yes **Safety Blocking:** Yes

Child lock: Yes

FINISH

Surface finishing: Full bevelled glass
Surface type: Ceramic Glass (4mm)
Easy installation system: Yes

ACCESSORIES

Junction Kit: NO
Teppan Yaki: Optional