RBF 78615 RTR American Retro Fridge LongLife No Frost with IonClean

Motor Inverter | Eco Function | IonClean Technology | LED | LongLife No Frost | Vitacare Box | Zero Box | 22L

DESCRIPTION	American Retro Fridge LongLife No Frost with IonClean
LIFE STYLE	Maestro
COLOURS	
REFERENCE	REF. 113400011 EAN. 8434778017502

RBF 78615 RTR

FEATURES

Free Standing bottom freezer refrigerator
LongLife No Frost with 2 independent circuits
IonClean technology
Electronic adjustable thermostat
VitaCare Box drawer + ZeroBox drawer
Safety glass shelves
On holidays function
Fast freezing function
Flexi rack
Front adjustable feet
ECO Function
LED Illumination
Climate class: T/SN
Total capacity (gross/net): 341 / 324 litres
Bottle rack and ice cube tray included

RBF 78615 RTR

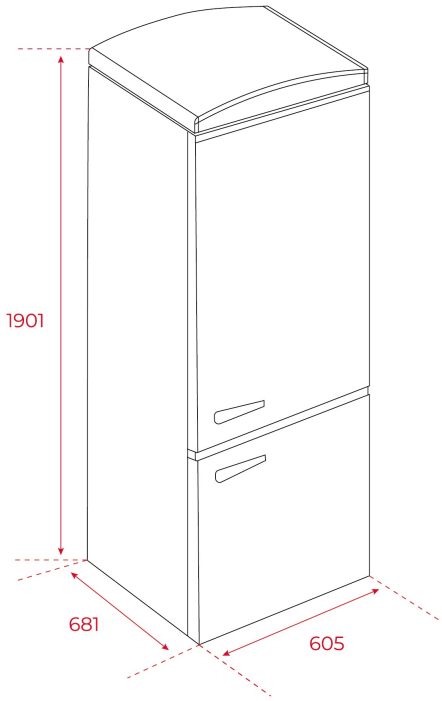

DIMENSIONS

Product height (mm): 1901
Product width (mm): 605
Product depth (mm): 681
Product length (mm):
Net weight (Kg): 70

TECHNICAL DETAILS

PRODUCT SHEET

Cooling system: LongLife No Frost
No Frost In Refrigerator Compartment: Yes
No Frost in chiller: Yes
No Frost in freezer compartment: Yes
Total gross capacity (litres): 341
Refrigerator compartment capacity (litres): 230
Chilling Compartment Capacity (litres): 22
Freezer compartment capacity (litres): 94
Freezer classification: 4
Freezing capacity: 8
Annual Consumption (kWh/year): 250
Temperature Rise Time (h): 10
Climate class: SN/T
Noise level (dB): 41

POWER SUPPLY

Frequency (Hz): 50
Power rate (V): 220-240
Power rate (W): 197
Defrost element power (W): 145
Energy consumption (kw/day): 0,72

Plug type: EU F TYPE
Inside light Consumption (W): 2

FEATURES

Type of installation: Free standing
Automatic defrosting in the refrigeration compartment: Yes
Automatic defrosting in the freezer compartment: Yes
Electronic control: Yes
Control panel: ELECTRONIC
Electronic adjustable thermostat: Yes
Antibacterial treatment: IonClean
Cooling set button: Yes
Fast freezing: Yes
ECO function: Yes
Inner light: Yes
Type of inner light: SIDE LED
External handle: Yes

CONTROL INDICATOR LIGHTS

Operating light fridge: Yes
Fast freezing indicator: Yes
Acoustic alarm: Yes

EQUIPMENT

Antibacterial gasket: Yes
Multipurpose compartment: NO
Ice cubes tray: 1
Bottle rack type: CHROMED
FlexiRack: Yes
Adjustable Feet Back: Yes
Adjustable feet front: Yes
Refrigerator adjustable shelves: Yes
Vegetable drawers: 2

RBF 78615 RTR
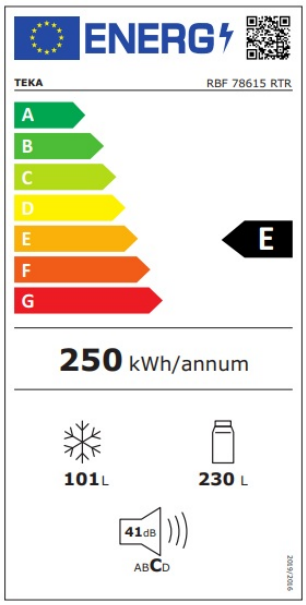
ENERGY LABEL