ML 822 BIS ML 822 BIS

Ceramic base | Defrost By Time | Defrost By Weight | Direct Access Menu | Electronic Door Opening | 22L

DESCRIPTION	ML 822 BIS
LIFE STYLE	Maestro
COLOURS	
REFERENCE	REF. 40584300 EAN. 8421152145494

ML 822 BIS

FEATURES

Built-in Microwave + Grill
Ceramic base with uniform heating
3 cooking functions
9 direct access menus
5 power levels, 2500 W
Grill power: 1200 W
Defrost by time and weight
Touch control display with knobs
Double glazed door with right opening
Electronic door opening
Children safety lock
Automatic disconnection when open door
Incandescent inner light
Dropdown grill
Quick start
Capacity (gross/net): 22 / 21.56 litres
Stainless steel cavity
Tangential ventilation

ML 822 BIS

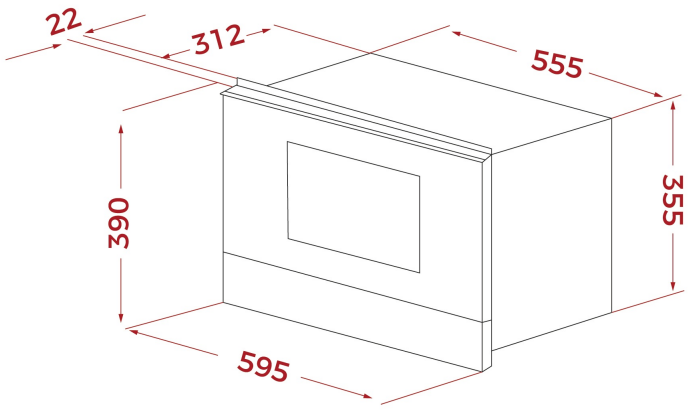

DIMENSIONS

Product height (mm): 390
Product width (mm): 595
Product depth (mm): 334
Product length (mm):
Net weight (Kg): 23,2

TECHNICAL DETAILS

FEATURES

Certificates: CE/CB/Gmark
Number of cavities: 1
Type of inner light: INCANDESCENT
Inside light position: RIGHT
Number of cooking functions: 3
Grill function: Yes
Drop-down grill: Yes
Number of guide levels (lower cavity): 0
Forced refrigeration tangential 1 speed: Yes
Microwave function: Yes
Microwave + Grill function: Yes
Number of power levels: 5
Minute Quick Start: Yes
Seconds Quick Start: Yes
Tangential ventilation: Yes

ELECTRIC CONNECTION

Maximum Nominal Power (W): 2700
Frequency (Hz): 50
Power rate (V): 220-240
Cable Connection Length (cm): 110

Plug: Yes
Inside light Consumption (W): 20

ENERGY CONSUMPTION

Energy consumption per cycle in conventional mode (kWh): 0.362
Grill (W): 1200
Maxi Grill (W): 1200
Cooling Fan Motor (W): 18

SAFETY SYSTEMS

Automatic disconnection when opening the door: Yes
Panel blocking system: Yes
Children safety block option: Yes
Grill protection: Yes
Safety Thermostat: Yes

ACCESSORIES

Glass Tray: 0
Crunch plate: YES

ENERGY EFFICIENCY

Energy Efficiency Index (EEI): A