CP 150 GS Plate Warmer with adjustable thermostat and push-pull system

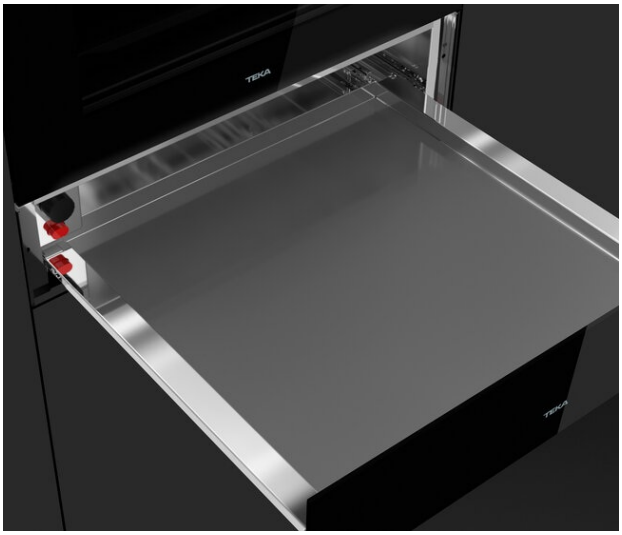

DESCRIPTION	Plate Warmer with adjustable thermostat and push-pull system
LIFE STYLE	Maestro
COLOURS	
REFERENCE	REF. 111600003 EAN. 8434778008906

CP 150 GS

FEATURES

Plate warmer
Temperature range: 30º-80º
6 plates setting
Push-pull opening system
Anti-sliding base
Cold front door
Safety thermostat
Optional frontal glass:
111890002 - Black Glass
111890006 - London Brick Brown Glass
111890004 - Stone Grey Glass
111890005 - Steam Grey Glass
111890003 - White Glass
111890008 - Vanilla Glass
111890009 - Antrazit Glass
111890007 - Reflex Glass

CP 150 GS

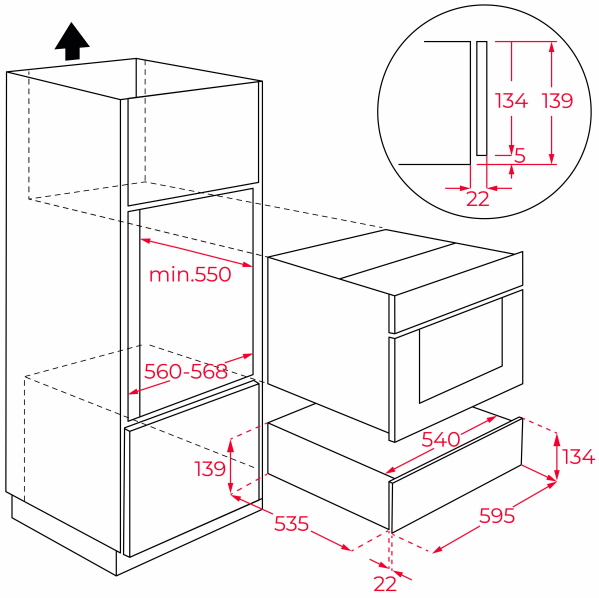

DIMENSIONS

Product height (mm): 140
Product width (mm): 595
Product depth (mm): 557
Product length (mm):
Net weight (Kg): 18

TECHNICAL DETAILS

FEATURES	**Certificates:** CE; CB **Min. Temperature Regulator (ºC):** 30 **Max. Temperature Regulator (ºC):** 80 **Cold front:** Yes
ELECTRIC CONNECTION	**Maximum Nominal Power (W):** 420 **Frequency (Hz):** 50-60 **Cable Connection Length (cm):** 110
SAFETY SYSTEMS	**Safety Thermostat:** Yes