EliteGrill Electric grill with 1000W power and 5 cooking functions

DESCRIPTION	Electric grill with 1000W power and 5 cooking functions
LIFE STYLE	Total
COLOURS	
REFERENCE	REF. 111510000 EAN. 8434778017212

EliteGrill

FEATURES

Multifunction free installation electric Grill
5x3 cooking functions
Cooking functions: Steak, Hot Dog, Fish, Sandwich, and Hamburger (well done, medium and barely finish)
Frontal electronic control with knobs
1000 W top heating and bottom heating elements
Temperature regulator 150 – 230 °C
Thickness adjustment
Warming indication lamp
Temperature indicator
Inside oil tray
Non-stick coating detachable plate
Maximum nominal power 2000 W
80 cm connection wire

TEKA

EliteGrill

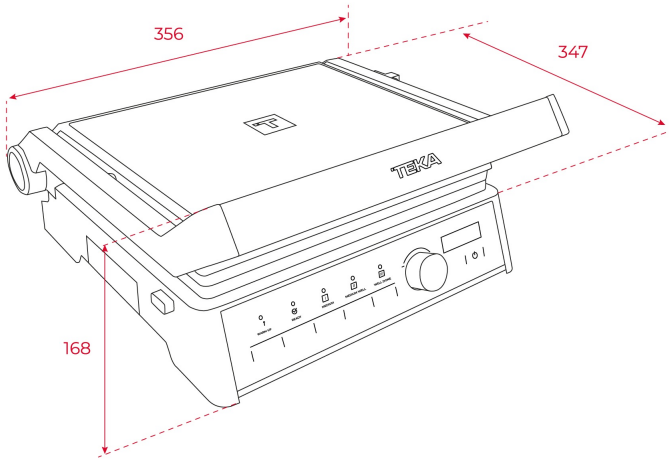

DIMENSIONS

Product height (mm): 168
Product width (mm): 356
Product depth (mm): 347
Product length (mm):
Net weight (Kg): 4.2

TECHNICAL DETAILS

ELECTRIC CONNECTION	**Maximum Nominal Power (W):** 2000 **Frequency (Hz):** 50 **Power rate (V):** 220 **Cable Connection Length (cm):** 80 **Plug:** Yes **Plug type:** VDE
ENERGY CONSUMPTION	**Bottom Heating Element (W):** 1000