CLC 8350 MC BK E01 Multi capsule and ground built-in coffee machine with 19 bar pump pressure and TFT display

Capsules

Ground coffee

DESCRIPTION	Multi capsule and ground built-in coffee machine with 19 bar pump pressure and TFT display
LIFE STYLE	Maestro
COLOURS	
REFERENCE	REF. 111630005 EAN. 8434778019704

CLC 8350 MC BK E01

FEATURES

Urban Colors Edition
Multi capsule and ground built-in coffee machine
Coffee size regulation
Touch control display with knobs
Capacity: 1 cup
Adjustable height system for different cup sizes
Milk frother and hot water pipe
Availability for ground coffee
3 storage drawers
19 bar pump pressure
1 litre water tank
Descaling function
Capsule adaptors suitable for: Nespresso®, Lavazza®, Caffitaly®, E.S.E.

CLC 8350 MC BK E01

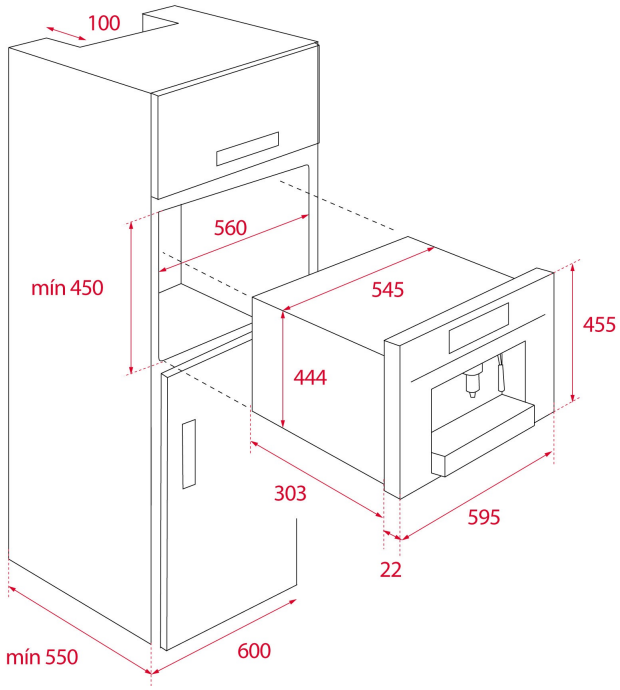

DIMENSIONS

Product height (mm): 455
Product width (mm): 595
Product depth (mm): 330
Product length (mm):
Net weight (Kg): 18,7

TECHNICAL DETAILS

FITTING MEASURES

Built-in Width (mm): 560
Built-in Depth (mm): 580
Built-in height (mm): 450

FEATURES

Certificates: CE/CB
Pump pressure (Bar): 19
Control panel: TFT + 2 knobs
Fingerprint proof: Yes
Number of cups: 1
Retractable pipe for steam and hot water: Yes
Grinded coffee: Yes
Coffee capsules: Yes
On/Off function: Yes
Steamer: Yes
Coffee temperatures: Yes
Selected function indicator: Yes
Full water tank indicator: Yes