# **MTP 913** Single lever Kitchen Tap with low swivel spout

Anti-Scale Aerator

Swivel Spout

| | |
|---|---|
| **DESCRIPTION** | Single lever Kitchen Tap with low swivel spout |
| **LIFE STYLE** | Easy |
| **COLOURS** | |
| **REFERENCE** | REF. 46913020CN<br>EAN. 8421152134542 |

# MTP 913

**FEATURES**

Low spout kitchen tap
Swivel spout
Anti-scale aerator
Cartridge with ceramic discs of high resistance
Highly precise temperature control
Greater handling sensitivity with smoother movements
3/8" flexible inlet pipes

# MTP 913

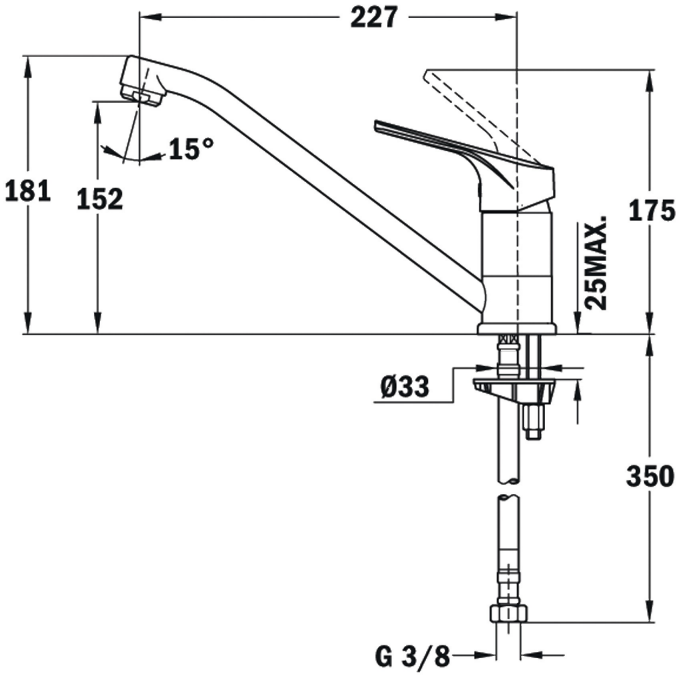


## DIMENSIONS

**Product height (mm):** 181
**Product width (mm):**
**Product depth (mm):**
**Product length (mm):**
**Net weight (Kg):** 1,17

## TECHNICAL DETAILS

| | |
|---|---|
| **MODELS** | **Type of installation:** Free standing |