TU 30.20 L Undermount stainless steel sink

Antibacterial

Lifetime warranty

DESCRIPTION	Undermount stainless steel sink
LIFE STYLE	Total
COLOURS	
REFERENCE	REF. 115040002 EAN. 8434778003482

TU 30.20 L

FEATURES

Space Series
Stainless steel sink
Two bowls
Undermount installation
3½" manual basket waste without overflow
250 and 200 mm deep bowls
90 cm base unit

TU 30.20 L

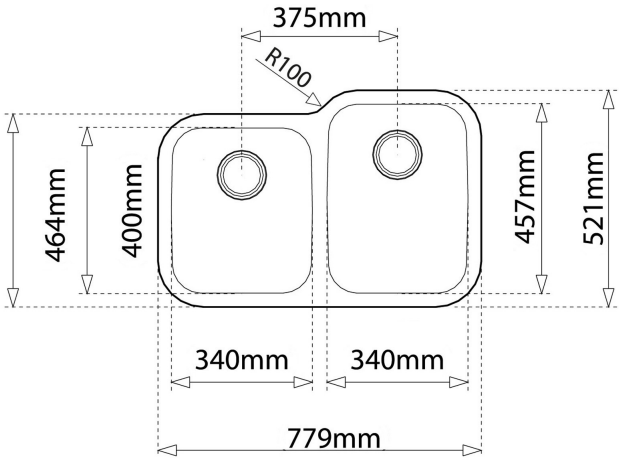

DIMENSIONS

Product height (mm):
Product width (mm): 521
Product depth (mm): 250
Product length (mm): 779
Net weight (Kg): 6,11

TECHNICAL DETAILS

MAIN BOWL	**Main Bowl Length (mm):** 340 **Main Bowl Width (mm):** 457 **Main Bowl Depth (mm):** 250
OTHER FEATURES	**Material:** Stainless Steel **Type of installation:** Undermount **Valve hole type:** 3½" **Overflow hole:** No **Sink Bowl / Top thickness (mm):** 1,0 / 1,2
OTHERS	**Base unit (cm):** 90
SECONDARY BOWL	**Secondary Bowl Length (mm):** 340 **Secondary Bowl Width (mm):** 400 **Secondary Bowl Depth (mm):** 200

SINK LAY OUT	**Number of bowls:** 2 **Number of drainers:** 0
ACCESSORIES	**Soundproof:** Yes **Installation clips:** Yes