GO 914 Two handles Kitchen Tap with swivel spout

Anti-Scale Aerator

Swivel Spout

DESCRIPTION	Two handles Kitchen Tap with swivel spout
LIFE STYLE	Easy
COLOURS	
REFERENCE	REF. 116030018 EAN. 8434778003116

GO 914

FEATURES

High spout kitchen tap
Swivel spout
Anti-scale aerator
Ceramic headparts
3/8" - 1/2" flexible inlet pipes

GO 914

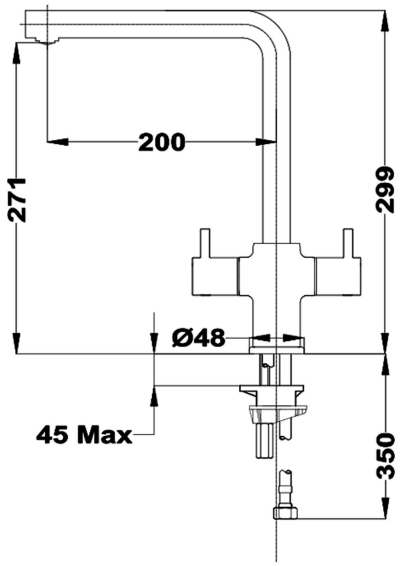

DIMENSIONS

Product height (mm): 299
Product width (mm):
Product depth (mm):
Product length (mm):
Net weight (Kg): 0,91

TECHNICAL DETAILS

MODELS	**Type of installation:** Free standing