GBC 75-G1 GBC BM Infinity G1 Gas on Glass hob. Special edition by Italdesign Giugiaro

Auto ignition

Autolock

Easy installation

DESCRIPTION	Infinity G1 Gas on Glass hob. Special edition by Italdesign Giugiaro
LIFE STYLE	Total
COLOURS	
REFERENCE	REF. 112570210 EAN. 8434778022612

GBC 75-G1 GBC BM

FEATURES

Designed in Italy by Italdesign Giugiaro
Gas on Glass hob
Exclusive matte black finishing
Frontal mechanical control panel with ergonomic design
5 cooking zones
1 double ring burner, 3,50 kW
1 fast burner, 2,80 kW
1 semi fast burner, 1,75 kW
1 semi fast burner, 1,40 kW
1 auxiliary burner, 1,00 kW
Ceramic glass surface
Auto ignition
Auto-lock safety system
Cast iron grids
Easy installation kit
Maximum nominal power 10450 W
Optional: Wok support

GBC 75-G1 GBC BM

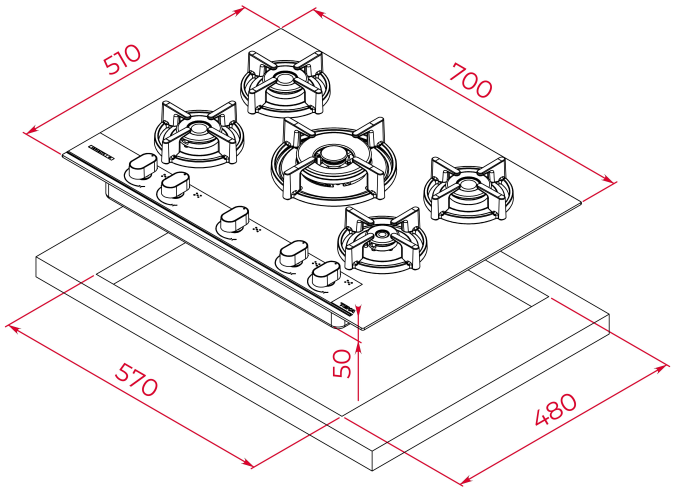

DIMENSIONS

Product height (mm): 110
Product width (mm): 700
Product depth (mm): 510
Product length (mm):
Net weight (Kg): 16

TECHNICAL DETAILS

FITTING MEASURES	**Built-in Width (mm):** 570 **Built-in Depth (mm):** 480 **Built-in height (mm):** 49
FEATURES	**Gas type:** Natural **Maximum nominal power (W) (Gas):** 10450 **Autoignition:** Yes
ELECTRIC CONNECTION	**Frequency (Hz):** 50/60 **Power rate (V):** 220-240 **Cable Connection Length (cm):** 100
COOKING ZONES	**Cooking Zones:** 5
SAFETY SYSTEMS	**Automatic safety disconnection (Auto Lock) (Gas):** Yes

FINISH	**Surface finishing:** C-edged glass **Surface type:** Ceramic Glass **Easy installation system:** Yes
ACCESSORIES	**Grid type:** Individual **Wok support:** Optional **Pan supports:** Yes **Junction Kit:** NO **Cast Iron Grids:** Yes **Teppan Yaki:** NO