EASY **HRB 6100**

60 cm Country Style Edition SurroundTemp Multifunction Oven

70L | Plus Extension Telescopic Guide | HydroClean

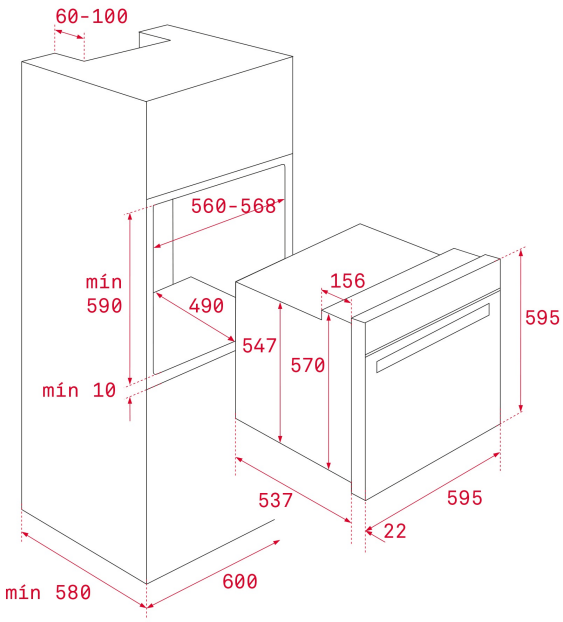

REFERENCE

REF: 111010009 EAN: 8434778008609

FEATURES

Country Style Edition
Multifunction oven
6 cooking functions
HydroClean system
Mechanical control knobs
Mechanical timer
Chrome supports with 5 cooking levels
Telescopic guides basic
Removable double glazed door
Manual quick preheating
Anti-tip deep tray
Capacity (gross/net): 71 / 70 litres

DIMENSIONS

Product height (mm): 595
Product width (mm): 595
Product depth (mm): 537+22
Product length (mm):
Net weight (Kg): 27

TECHNICAL DETAILS

Energy Efficiency Class: A
Power rate (V): 220/240
Frequency (Hz): 50/60
Maximum Nominal Power (W): 2615

COLOURS