ForSquare 72.40 TG
Inset Tegranite sink with one bowl

200mm depth | Colour Intensity | Easy Clean | Food safe | High resistance

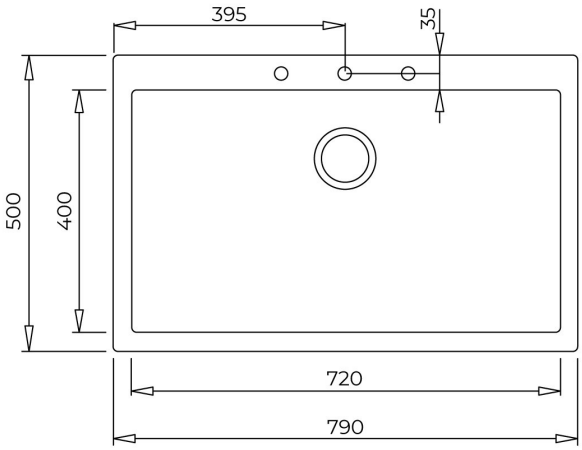

REFERENCE

REF: 115230000 EAN: 8434778007039

FEATURES

ForSquare Series
Tegranite+ sink
1 bowl
High resistance surface to impacts, thermal shocks and high temperatures
Excellent UV resistance against decoloring
Bacteria-free surface very easy to clean
Inset installation
80% quartz and resins
3½" automatic basket waste with siphon
200 mm deep bowl
80 cm base unit

DIMENSIONS

Product height (mm):
Product width (mm): 500
Product depth (mm): 200
Product length (mm): 790
Net weight (Kg): 13

COLOURS

115230000	Black
115230001	Artic white
115230001	Bright cream
115230001	Avena beige
115230001	Stone grey