Square 2B 760 TG
Undermount Tegranite sink with two bowls

200mm depth | Colour Intensity | Easy Clean | Food safe | High resistance

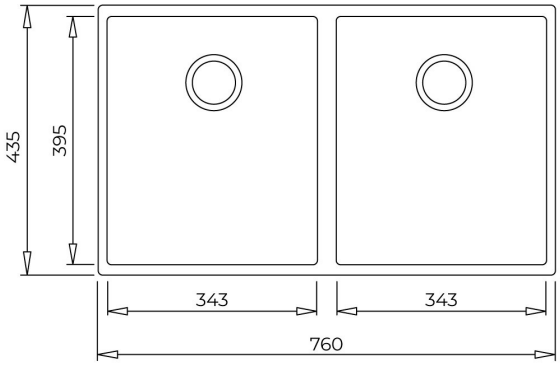

REFERENCE

REF: 115260024 EAN: 8434778007220

FEATURES

Square Series
Tegranite+ sink
2 bowls
High resistance surface to impacts, thermal shocks and high temperatures
Excellent UV resistance against decoloring
Bacteria-free surface very easy to clean
Undermount installation
80% quartz and resins
3½" manual basket waste with siphon
200 mm deep bowls
80 cm base unit

DIMENSIONS

Product height (mm):
Product width (mm): 435
Product depth (mm): 200
Product length (mm): 760
Net weight (Kg): 10,89

COLOURS

115260024	Black
115260025	Bright cream
115260025	Avena beige
115260025	Artic white
115260025	Stone grey