TT 642 Vitroceramic hob (60 cm / 23.6 inch) TT 642

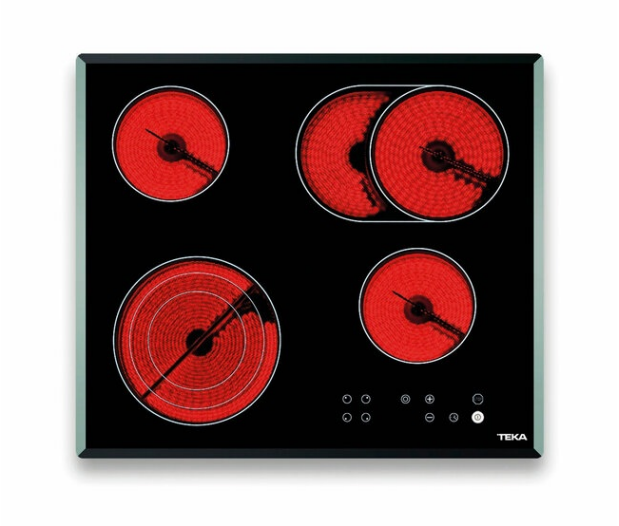

Autolock

DESCRIPTION	Vitroceramic hob (60 cm / 23.6 inch) TT 642
LIFE STYLE	Total
COLOURS	
REFERENCE	REF. 10210047 EAN. 8421152101179

TT 642

FEATURES

Flex vitroceramic hob
Touch Control
4 cooking zones
1 zone Ø 170 x 265 mm
1 high lights Ø 120/180/210 mm
1 high lights Ø 145 mm
1 high lights Ø 145mm
Ceramic glass surface
Auto-lock safety system
Cooking timer
Residual heat indicator
Power plus
Child lock
Maximum nominal power 6900 W

TT 642

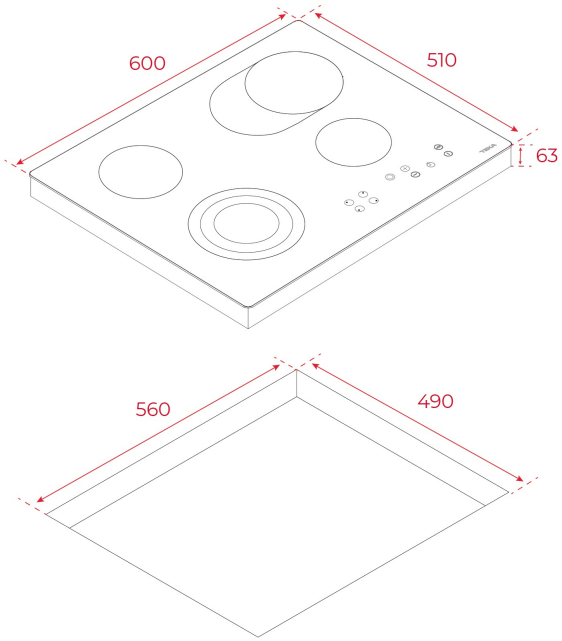

DIMENSIONS

Product height (mm): 63
Product width (mm): 600
Product depth (mm): 510
Product length (mm):
Net weight (Kg): 8

TECHNICAL DETAILS

FITTING MEASURES	**Built-in Width (mm):** 560 **Built-in Depth (mm):** 490
ELECTRIC CONNECTION	**Frequency (Hz):** 50/60 **Power rate (V):** 230 **Cable Connection Length (cm):** 110 **Maximum Nominal Power (W) (Electric hob):** 6900
COOKING ZONES	**Cooking Zones:** 4
SAFETY SYSTEMS	**Residual heat indicator (Electric hob):** Yes **Automatic safety disconnection (Auto Lock) (Electric hob):** Yes **Safety Blocking:** Yes
FINISH	**Surface finishing:** Stainless steel frame