JZC 94313 ABN Gas + Induction hob with Touch Control Multislider and 4 cooking zones in 90cm of natural gas

MultiSlider | Auto ignition | Autolock | ExactFlame | Power | Power Plus | Easy installation

DESCRIPTION	Gas + Induction hob with Touch Control Multislider and 4 cooking zones in 90cm of natural gas
LIFE STYLE	Total
COLOURS	
REFERENCE	REF. 112570115 EAN. 8434778011265

JZC 94313 ABN

FEATURES

Gas on glass + Induction hob
ExactFlame
Frontal control knobs + Touch Control MultiSlider
4 cooking zones
1 double ring burner, 4.00 kW
1 zone Ø 180/280 mm
1 zone Ø 180 mm
1 zone Ø 145 mm
Ceramic glass surface
Auto ignition
Auto-lock safety system
Cast iron grids
Indution:
Cooking timer
Power plus
Child lock
Residual heat indicator
Power management
Easy installation kit
Maximum nominal power(Gas) 4000 W
Maximum nominal power(Induction) 7200 W
Wok support included
Silver knobs accessory available

JZC 94313 ABN

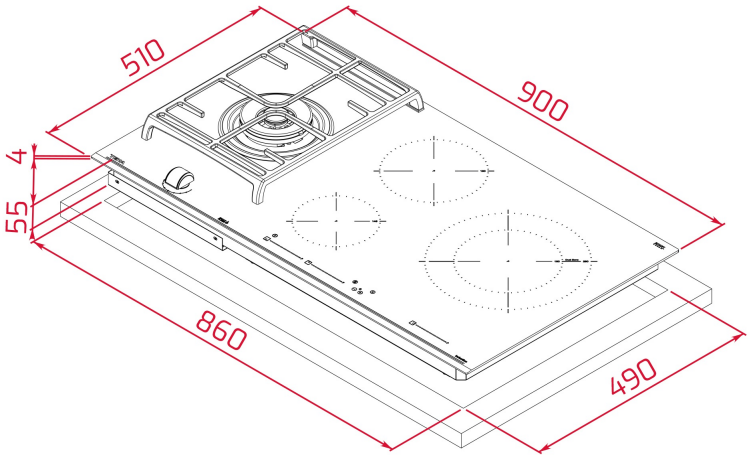

DIMENSIONS

Product height (mm): 98
Product width (mm): 900
Product depth (mm): 510
Product length (mm):
Net weight (Kg): 16,4

TECHNICAL DETAILS

FITTING MEASURES	**Built-in Width (mm):** 860 **Built-in Depth (mm):** 490 **Built-in height (mm):** 49
FEATURES	**Gas type:** Natural **Maximum nominal power (W) (Gas):** 4000 **Autoignition:** Yes **Number of electric power levels:** 9 **Power management function:** Yes
ELECTRIC CONNECTION	**Maximum Nominal Power (W):** 7200 **Frequency (Hz):** 50/60 **Power rate (V):** 220-240 **Cable Connection Length (cm):** 110 **Maximum Nominal Power (W) (Electric hob):** 7200
COOKING ZONES	**Cooking Zones:** 4

Energy consumption for the whole hob, Wh/Kg: 177,6

SAFETY SYSTEMS

Automatic safety disconnection (Auto Lock) (Gas): Yes
Residual heat indicator (Electric hob): Yes
Automatic safety disconnection (Auto Lock) (Electric hob): Yes
Child lock: Yes

FINISH

Surface finishing: Front bevelled glass
Surface type: Ceramic Glass (4mm)
Easy installation system: Yes

ACCESSORIES

Grid type: Full Grid
Wok support: Optional
Junction Kit: Optional
Cast Iron Grids: Yes
Teppan Yaki: No