LI5 1481 EU Built-In Washing Machine with 15 washing programs

Quick Cycle

Washing capacity: 8Kg

DESCRIPTION	Built-In Washing Machine with 15 washing programs
LIFE STYLE	Maestro
COLOURS	
REFERENCE	REF. 114000003 EAN. 8434778015393

LI5 1481 EU

FEATURES

Built-in Washing Machine
Electronic control panel
Washing capacity: 8 kg
15 washing programs
Fast program: 14 minutes
Special programs: ECO mode, Delicate
Delay timer function
SmartWash system
Maximum spinning speed: 1400 RPM
Automatic water regulation
Automatic door lock safety system
Child lock
SoftCare drum
Delay timer: 1-24 hours
30 cm wide porthole door

LI5 1481 EU

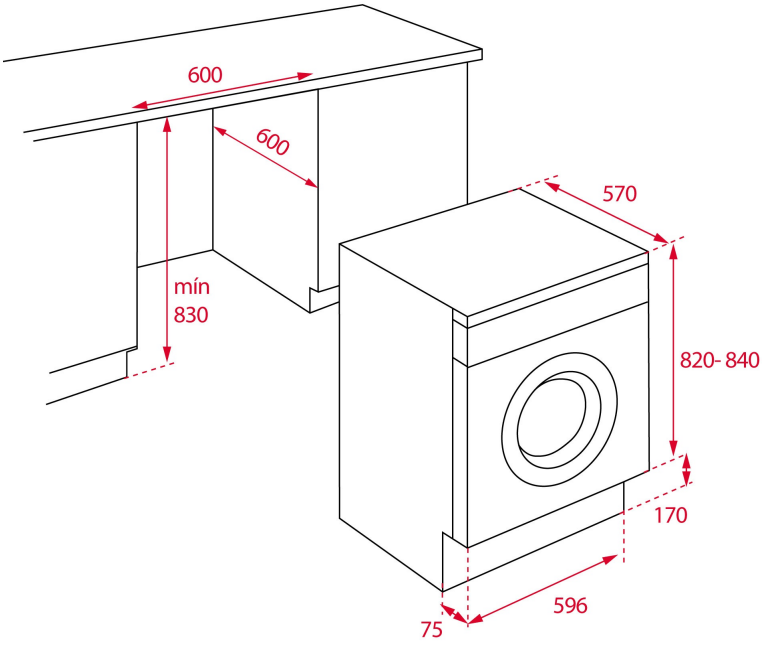

DIMENSIONS

Product height (mm): 820
Product width (mm): 596
Product depth (mm): 570
Product length (mm):
Net weight (Kg): 68

TECHNICAL DETAILS

PRODUCT SHEET

Type of installation: Built-in
Energy consumption (kWh/year): 118
Water consumption (litres/year): 9850

POWER SUPPLY

Frequency (Hz): 50
Power rate (V): 220-240
Maximum Nominal Power (W): 1600
Nominal power motor (W): 350
Power of heating element (W): 1600
Water outlet hose length (m): 1.5

FEATURES

Stainless Steel Drum: Yes
Number of programs: 15
Number Of Washing Temperatures: 0-20-30-40-60-90
Control panel: ELECTRONIC
Electronic washing management: Yes
Child lock: Yes
Auto lock door: Yes
Cancel spin cycle button: Yes

CONTROL INDICATOR LIGHTS	**Selected program indicator:** Yes **Remaining time:** Yes
SPECIAL FUNCTIONS	**Fast program:** Yes **Fast program (minutes):** 14 **Economic program:** Yes **Intense program:** Yes **Delayed Timer (h):** 0-24 **Delicate fabrics:** Yes **Resistant:** Yes
EQUIPMENT	**Adjustable Feet Back:** Yes **Adjustable feet front:** Yes

LI5 1481 EU
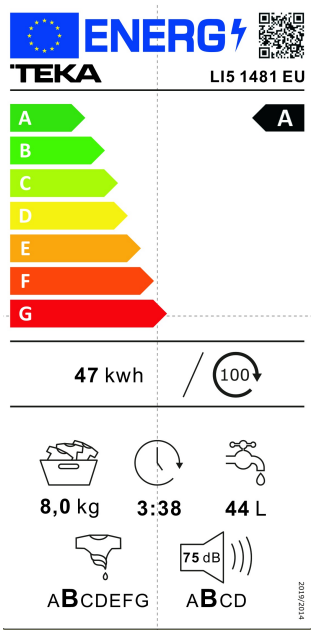
ENERGY LABEL