# **GZC 64320 XB** 60cm Gas on Glass Hob with ExactFlame function of natural gas

Auto ignition | Autolock | ExactFlame | Easy installation

| | |
|---|---|
| **DESCRIPTION** | 60cm Gas on Glass Hob with ExactFlame function of natural gas |
| **LIFE STYLE** | Total |
| **COLOURS** | |
| **REFERENCE** | REF. 112570168<br>EAN. 8434778019087 |

# GZC 64320 XB

**FEATURES**

Urban Colors Edition
Gas on glass hob
ExactFlame
Frontal control knobs with ergonomic design
4 cooking zones
1 double ring burner, 4.00 kW
1 fast burner, 2.8 kW
1 semi fast burner, 1.7 kW
1 auxiliary burner, 1 kW
Tempered glass surface
Auto ignition
Auto-lock safety system
Cast iron grids
Easy installation kit
Maximum nominal power 9550 W
Optional: Wok support
Silver knobs accessory available

# GZC 64320 XB

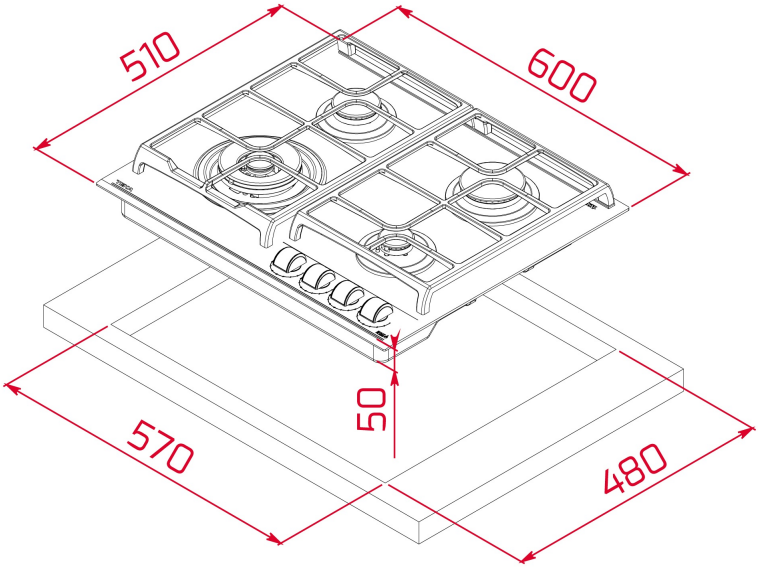


## DIMENSIONS

**Product height (mm):** 98
**Product width (mm):** 600
**Product depth (mm):** 510
**Product length (mm):**
**Net weight (Kg):** 14,8

## TECHNICAL DETAILS

| | |
|---|---|
| **FITTING MEASURES** | **Built-in Width (mm):** 570<br>**Built-in Depth (mm):** 480<br>**Built-in height (mm):** 49 |
| **FEATURES** | **Gas type:** Natural&Butane<br>**Maximum nominal power (W) (Gas):** 9550<br>**Autoignition:** Yes |
| **ELECTRIC CONNECTION** | **Frequency (Hz):** 50/60<br>**Power rate (V):** 220-240<br>**Cable Connection Length (cm):** 100 |
| **COOKING ZONES** | **Cooking Zones:** 4 |
| **SAFETY SYSTEMS** | **Automatic safety disconnection (Auto Lock) (Gas):** Yes |

| | |
|---|---|
| **FINISH** | **Surface finishing:** Front bevelled glass<br>**Surface type:** Tempered Glass (8mm)<br>**Easy installation system:** Yes |
| **ACCESSORIES** | **Grid type:** Full Grid<br>**Wok support:** Optional<br>**Junction Kit:** NO<br>**Cast Iron Grids:** Yes<br>**Teppan Yaki:** NO |