GZC 31339 XB 50 cm modular gas on glass hob varioPro Series with 1 burner and auto-lock safety

Auto ignition | Autolock | ExactFlame | Easy installation

DESCRIPTION	50 cm modular gas on glass hob varioPro Series with 1 burner and auto-lock safety
LIFE STYLE	Total
COLOURS	
REFERENCE	REF. 112570179 EAN. 8434778019209

GZC 31339 XB

FEATURES

Urban Colors Edition
VarioPro Series
Modular gas on glass hob
ExactFlame
Frontal control knobs with ergonomic design
1 cooking zone
1 double ring burner, 3.5 kW
Ceramic glass surface
Auto ignition
Auto-lock safety system
Cast iron grids
Easy installation kit
Maximum nominal power 3500 W
Silver knobs accessory available
Optional: Wok support

GZC 31339 XB

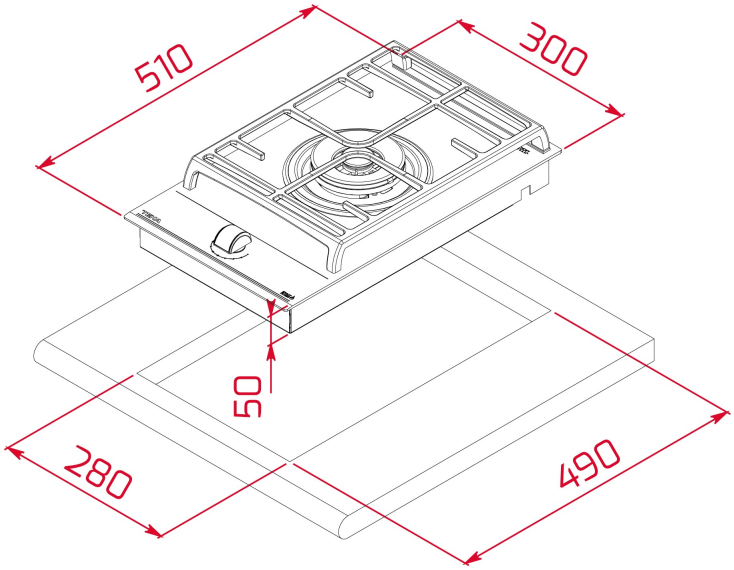

DIMENSIONS

Product height (mm): 55
Product width (mm): 300
Product depth (mm): 510
Product length (mm):
Net weight (Kg): 6,25

TECHNICAL DETAILS

FITTING MEASURES	**Built-in Width (mm):** 280 **Built-in Depth (mm):** 490 **Built-in height (mm):** 49
FEATURES	**Maximum nominal power (W) (Gas):** 3500 **Autoignition:** Yes
ELECTRIC CONNECTION	**Frequency (Hz):** 50/60 **Power rate (V):** 220-240 **Cable Connection Length (cm):** 110
COOKING ZONES	**Cooking Zones:** 1
SAFETY SYSTEMS	**Automatic safety disconnection (Auto Lock) (Gas):** Yes

FINISH	**Surface finishing:** Front bevelled glass **Surface type:** Ceramic Glass (4mm) **Easy installation system:** Yes
ACCESSORIES	**Grid type:** Full Grid **Wok support:** Optional **Junction Kit:** Optional **Cast Iron Grids:** Yes **Teppan Yaki:** NO