IN 993 Single Lever Kitchen Tap with swivel spout

Anti-Scale Aerator

Swivel Spout

DESCRIPTION	Single Lever Kitchen Tap with swivel spout
LIFE STYLE	Easy
COLOURS	
REFERENCE	REF. 116050000 EAN. 8434778000665

IN 993

FEATURES

Low spout kitchen tap
Swivel spout
Anti-scale aerator
40 mm cartridge
Cartridge with ceramic discs of high resistance
Highly precise temperature control
Greater handling sensitivity with smoother movements
3/8" certified flexible inlet pipes

TEKA

IN 993

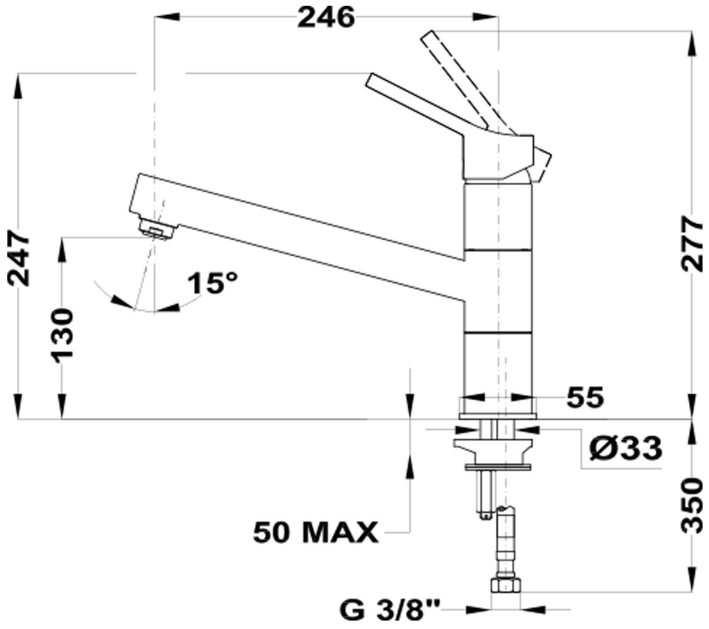

DIMENSIONS

Product height (mm): 255
Product width (mm):
Product depth (mm):
Product length (mm):
Net weight (Kg): 2

TECHNICAL DETAILS

MODELS	**Type of installation:** Free standing