Stylo 2B Inset stainless steel sink Two bowls

Antibacterial

Lifetime warranty

DESCRIPTION	Inset stainless steel sink Two bowls
LIFE STYLE	Total
COLOURS	
REFERENCE	REF. 11107027 EAN. 8421152705704

Stylo 2B

FEATURES

Stylo Series
Stainless steel sink
Two bowls
Inset installation
3½" manual basket waste with siphon
170 mm deep bowls
80 cm base unit

Stylo 2B

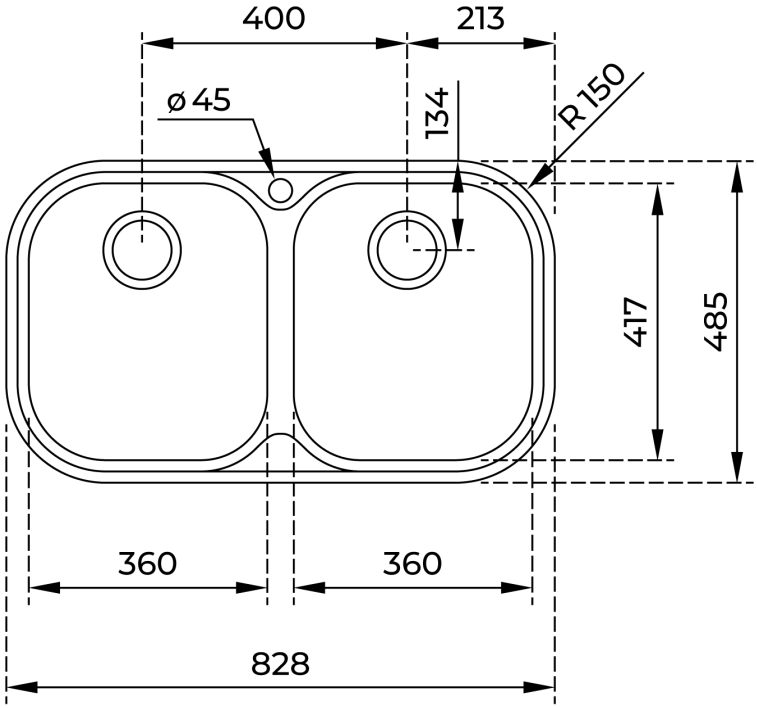

DIMENSIONS

Product height (mm):
Product width (mm): 485
Product depth (mm): 170
Product length (mm): 828
Net weight (Kg): 3,56

TECHNICAL DETAILS

MAIN BOWL	**Main Bowl Length (mm):** 360 **Main Bowl Width (mm):** 417 **Main Bowl Depth (mm):** 170
OTHER FEATURES	**Material:** Stainless Steel **Type of installation:** Inset **Number of tap holes:** 1 **Valve hole type:** 3½" **Overflow hole:** Round **Sink Bowl / Top thickness (mm):** 0,7
OTHERS	**Base unit (cm):** 80
SECONDARY BOWL	**Secondary Bowl Length (mm):** 360 **Secondary Bowl Width (mm):** 417 **Secondary Bowl Depth (mm):** 170

SINK LAY OUT	**Number of bowls:** 2 **Number of drainers:** 0
ACCESSORIES	**Soundproof:** Yes **Installation clips:** Yes **Siphon:** Yes