Classic MAX 1000 1B 1D Inset stainless steel sink One bowl and one drainer

200mm depth

Antibacterial

Lifetime warranty

DESCRIPTION	Inset stainless steel sink One bowl and one drainer
LIFE STYLE	Total
COLOURS	
REFERENCE	REF. 11119214 EAN. 8421152122594

Classic MAX 1000 1B 1D

FEATURES

Classic Series
Stainless steel sink
One bowl and one drainer
Inset installation
3½" manual basket waste with siphon
200 mm deep bowl
45 cm base unit

Classic MAX 1000 1B 1D

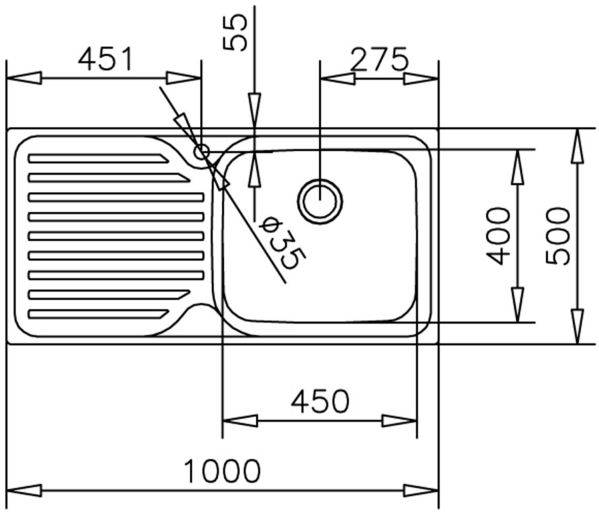

DIMENSIONS

Product height (mm):
Product width (mm): 500
Product depth (mm): 200
Product length (mm): 1000
Net weight (Kg): 5,18

TECHNICAL DETAILS

MAIN BOWL	**Main Bowl Length (mm):** 450 **Main Bowl Width (mm):** 400 **Main Bowl Depth (mm):** 200
OTHER FEATURES	**Material:** Stainless Steel **Type of installation:** Inset **Number of tap holes:** 1 **Valve hole type:** 3½" **Overflow hole:** Round **Sink Bowl / Top thickness (mm):** 1,0 / 0,8
OTHERS	**Base unit (cm):** 60
SINK LAY OUT	**Number of bowls:** 1 **Number of drainers:** 1 **Drainer position:** Right

ACCESSORIES	**Soundproof:** Yes **Installation clips:** Yes **Siphon:** Yes