Diamond RS15 2B 1D Inset glass sink with two bowls and one drainer

200mm depth | Antibacterial | Lifetime warranty + SilentSmart | R15, easy to clean

DESCRIPTION	Inset glass sink with two bowls and one drainer
LIFE STYLE	Maestro
COLOURS	
REFERENCE	REF. 115160007 EAN. 8434778004809

Diamond RS15 2B 1D

FEATURES

Diamond Series
Stainless steel and glass sink
Two inox bowls and one drainer
Safety tempered glass with bevelled edges
Inset installation
Easy clean radius R15 corners
3½" SQ automatic basket waste with siphon
Decorative SQ cover
SilentSmart, 50% less noise
200 mm deep bowls
80 cm base unit

Diamond RS15 2B 1D

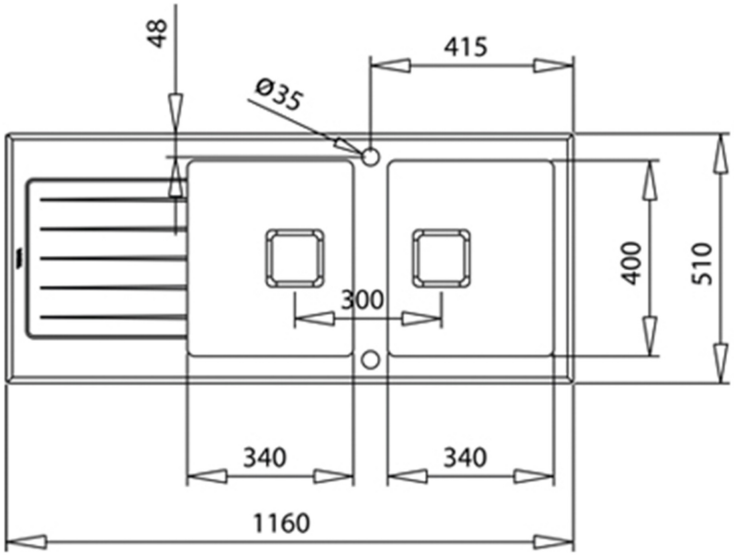

DIMENSIONS

Product height (mm):
Product width (mm): 510
Product depth (mm): 200
Product length (mm): 1160
Net weight (Kg): 4,6

TECHNICAL DETAILS

MAIN BOWL	**Main Bowl Length (mm):** 340 **Main Bowl Width (mm):** 400 **Main Bowl Depth (mm):** 200
OTHER FEATURES	**Material:** Stainless Steel and Glass **Type of installation:** Inset **Number of tap holes:** 2 **Valve hole type:** 3½" SQUARED **Overflow hole:** Rectangular **Sink Bowl / Top thickness (mm):** 1,0 / 8,0
OTHERS	**Base unit (cm):** 80
SECONDARY BOWL	**Secondary Bowl Length (mm):** 340 **Secondary Bowl Width (mm):** 400 **Secondary Bowl Depth (mm):** 200

SINK LAY OUT	**Number of bowls:** 2 **Number of drainers:** 1 **Drainer position:** Reversible
ACCESSORIES	**Soundproof:** Yes **SilentSmart:** Yes **Siphon:** Yes