Infant OD 1B 1D Inset stainless steel sink One bowl and one drainer

Antibacterial

Lifetime warranty

DESCRIPTION	Inset stainless steel sink One bowl and one drainer
LIFE STYLE	Easy
COLOURS	
REFERENCE	REF. 40109700 EAN. 8421152065334

Infant OD 1B 1D

FEATURES

Stainless steel sink
One bowl and one drainer
Inset installation
1½" manual waste with siphon
140 mm deep bowl
45 cm base unit

Infant OD 1B 1D

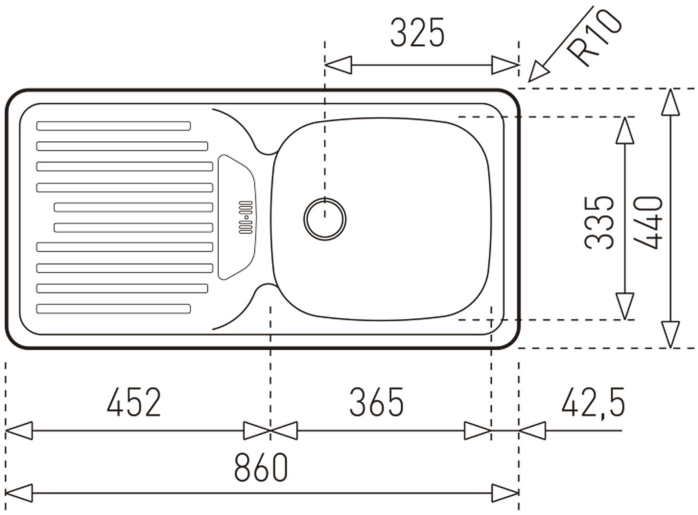

DIMENSIONS

Product height (mm):
Product width (mm): 440
Product depth (mm): 140
Product length (mm): 860
Net weight (Kg): 2,57

TECHNICAL DETAILS

MAIN BOWL	**Main Bowl Length (mm):** 365 **Main Bowl Width (mm):** 335 **Main Bowl Depth (mm):** 140
OTHER FEATURES	**Material:** Stainless Steel **Type of installation:** Inset **Valve hole type:** 1½" **Overflow hole:** Overflow on Drainer **Sink Bowl / Top thickness (mm):** 0,6
OTHERS	**Base unit (cm):** 45
SINK LAY OUT	**Number of bowls:** 1 **Number of drainers:** 1 **Drainer position:** Reversible

ACCESSORIES	**Soundproof:** Yes **Installation clips:** Yes **Siphon:** Yes