Universe 60 T-XP 1½B Inset reversible stainless steel sink

Antibacterial

Lifetime warranty

DESCRIPTION	Inset reversible stainless steel sink
COLOURS	
REFERENCE	REF. 115070001 EAN. 8434778015171

Universe 60 T-XP 1½B

FEATURES

Universe Series
Stainless steel sink, Polished finish
One bowl and one auxiliary bowl, reversible
Inset installation
3½" manual basket waste and siphon
160 and 95 mm deep bowls
60 cm base unit

Universe 60 T-XP 1½B

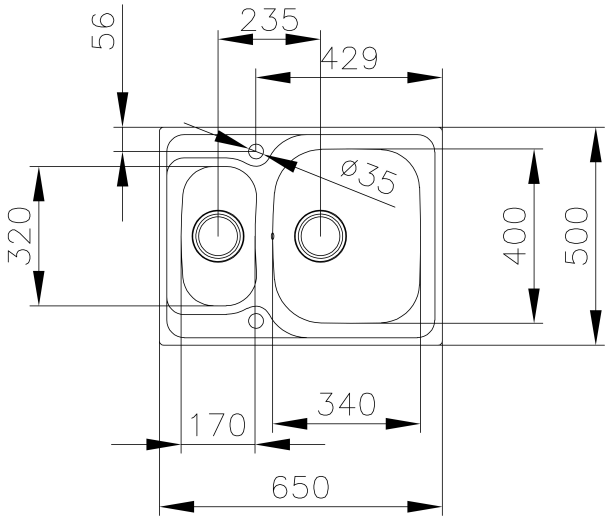

DIMENSIONS

Product height (mm):
Product width (mm): 500
Product depth (mm): 160
Product length (mm): 650
Net weight (Kg): 2,8

TECHNICAL DETAILS

MAIN BOWL	**Main Bowl Length (mm):** 340 **Main Bowl Width (mm):** 400 **Main Bowl Depth (mm):** 160
OTHER FEATURES	**Material:** Stainless Steel **Type of installation:** Inset **Valve hole type:** 3½" **Overflow hole:** Round **Sink Bowl / Top thickness (mm):** 0,7
OTHERS	**Base unit (cm):** 60
SECONDARY BOWL	**Secondary Bowl Length (mm):** 170 **Secondary Bowl Width (mm):** 320 **Secondary Bowl Depth (mm):** 95

SINK LAY OUT	**Number of bowls:** 1 **Number of drainers:** 0 **Drainer position:** Reversible
ACCESSORIES	**Soundproof:** Yes **Installation clips:** Yes **Siphon:** Yes