Radea R10 50.40 M-TG 2-in-1 installation Radea Series sink with one bowl

200mm depth | Colour Intensity | Easy Clean | Food safe | High resistance

DESCRIPTION	2-in-1 installation Radea Series sink with one bowl
LIFE STYLE	Maestro
COLOURS	
REFERENCE	REF. 115230053 EAN. 8434778023770

Radea R10 50.40 M-TG

FEATURES

Radea Series
Tegranite+ sink
One bowl
2-in-1 installation possibilities: top or undermount
3½” PerfectFlow manual waste basket with siphon
HelixPro waste basket
200 mm deep bowl
60 cm base unit

Radea R10 50.40 M-TG

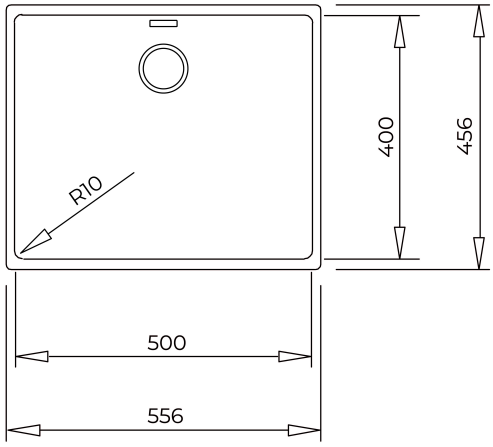

DIMENSIONS

Product height (mm):
Product width (mm): 456
Product depth (mm):
Product length (mm): 556
Net weight (Kg): 12,41

TECHNICAL DETAILS

MAIN BOWL	**Main Bowl Length (mm):** 500 **Main Bowl Width (mm):** 400 **Main Bowl Depth (mm):** 200
OTHER FEATURES	**Material:** Tegranite+ **Type of installation:** Inset,Undermount **Valve hole type:** 3½" PerfectFlow **Overflow hole:** Round **Sink Bowl / Top thickness (mm):** 10/7
OTHERS	**Base unit (cm):** 60
SINK LAY OUT	**Number of bowls:** 1 **Number of drainers:** 0
ACCESSORIES	**Installation clips:** Yes

Siphon: Yes