DHI 90

Built-in/Free installation decorative hood with double turbine

LED

Stop Delay Timer

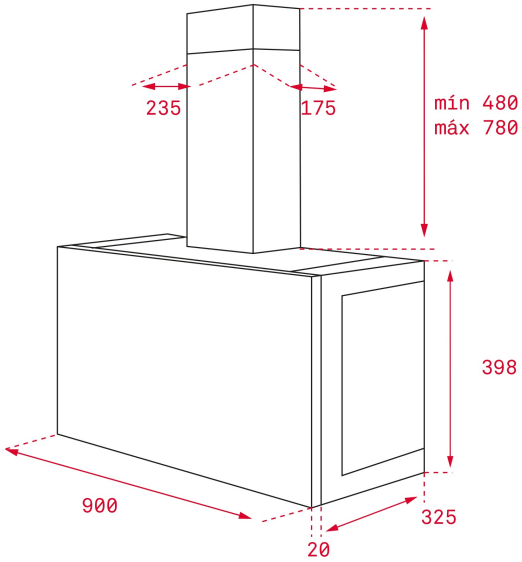

REFERENCE

REF: 40487400 EAN: 8421152098363

FEATURES

Built-in hood
Electronic control
3 speeds + 1 intensive
Free Outlet exhaust capacity (m3/h): 850
Intensive speed sound level (dBA): 650
Max speed exhaust capacity (m3/h): 400
Min speed exhaust capacity (m3/h): 295
Intensive speed sound level (dBA): 68
Max speed sound level (dBA): 57
Min speed sound level (dBA): 48
3 LED lamps
2 Stainless Steel filter
Stop delay timer
Easy-Clean inside panel
Operating pilot light
Anti-return valve included
Outlet reduction included
Optional recirculation kit with tube cover installation: SET 1S
Optional Charcoal Filter: D4C

DIMENSIONS

Product height (mm): 445
Product width (mm): 900
Product depth (mm): 345
Product length (mm):
Net weight (Kg): 16

TECHNICAL DETAILS

Energy Efficiency Class: D
Noise (LwA) Min Speed (dB): 47,9
Noise (LwA) Max Speed (dB): 56,6
Noise (LwA) Boost Speed (dB): 67,7
Ø Outlet (mm): 150

COLOURS

40487400 Stainless steel