MAESTRO **HLB 8600 LB**

A+ Multifunction-Surround Temp. oven with 20 recipes

70L | Plus Extension Telescopic Guide | HydroClean | SoftClose | SurroundTemp

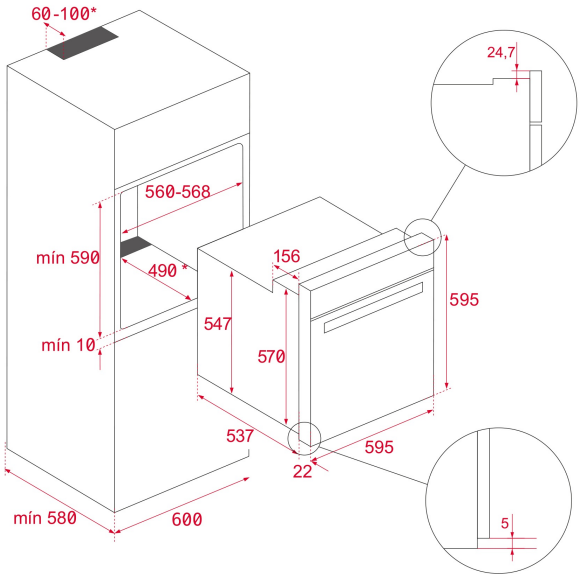

REFERENCE

REF: 111000014 EAN: 8434778008302

FEATURES

Urban Colors Edition
Multifunction SurroundTemp oven
12 cooking functions
Automatic HydroClean system
Touch control display with knob
Personal cooking assistant: 20 automatic programs
Chrome supports with 5 cooking levels
Easy slide telescopic guides
Removable triple glazed door
SoftClose system
Children safety lock
Automatic disconnection safety system
Automatic quick preheating
Anti-tip deep tray and reinforced grid
Capacity (gross/net): 71 / 70 litres

DIMENSIONS

Product height (mm): 595
Product width (mm): 595
Product depth (mm): 537+22
Product length (mm):
Net weight (Kg): 32

TECHNICAL DETAILS

Energy Efficiency Class: A+
Power rate (V): 220-240
Frequency (Hz): 50/60
Maximum Nominal Power (W): 3215

COLOURS

111000014	London brick brown glass
111000013	Black Glass
111000013	Stone Grey Glass
111000013	White Glass
111000013	Steam Grey Glass